A **mm (inch)**

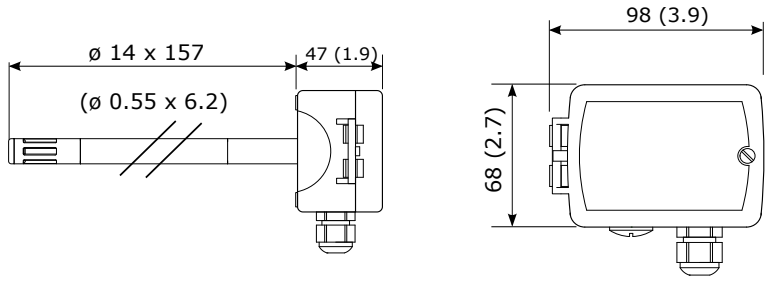

B

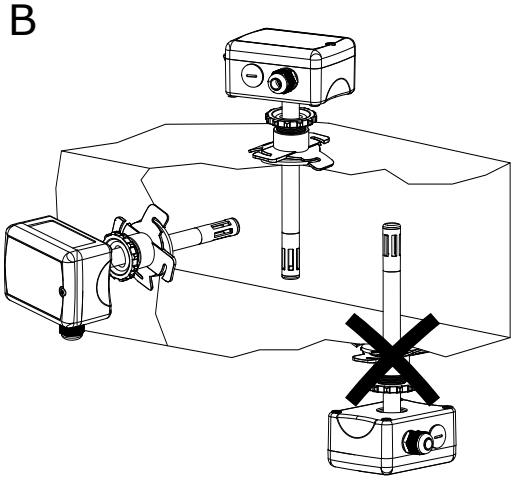

C

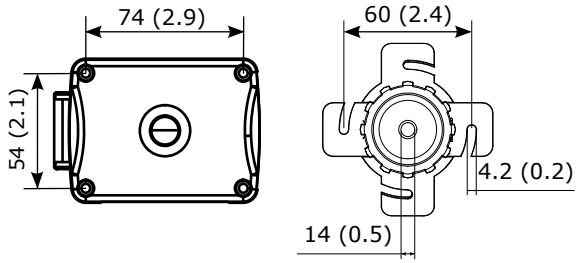

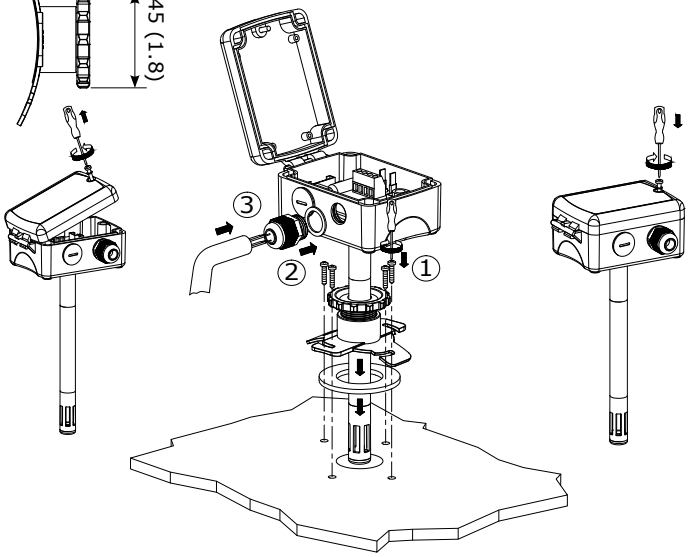

SDC2-OP

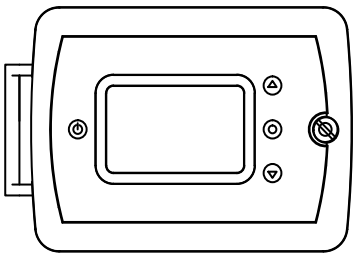

D

AO Mode	
JP1	
3 / 2 / 1	VDC
3 / 2 / 1	mA

AO Range	
JP3	
3 / 2 / 1	0...10 V 0...20 mA
3 / 2 / 1	2...10 V 4...20 mA

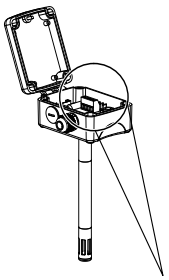

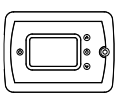

LED-status blinking interval

sec.	sec.	sec.	sec.	sec.	sec.	
●	○	○	○	○	●	✓
●	●	●	●	●	●	⊗

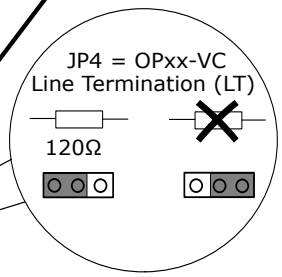

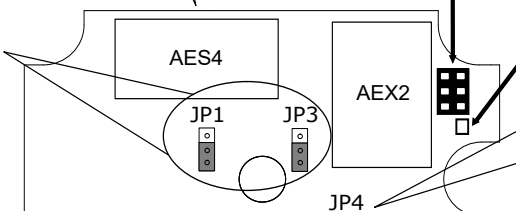

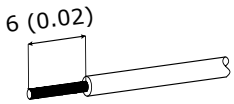

AEC-PM2

DO		
NO	DO1	NC

Power		AO
V+	GND	AO1

OPxx-VC			
OP1	OP2	OP3	OP4

RS485		
REF	–	+

1/2

© Vector Controls GmbH, Switzerland

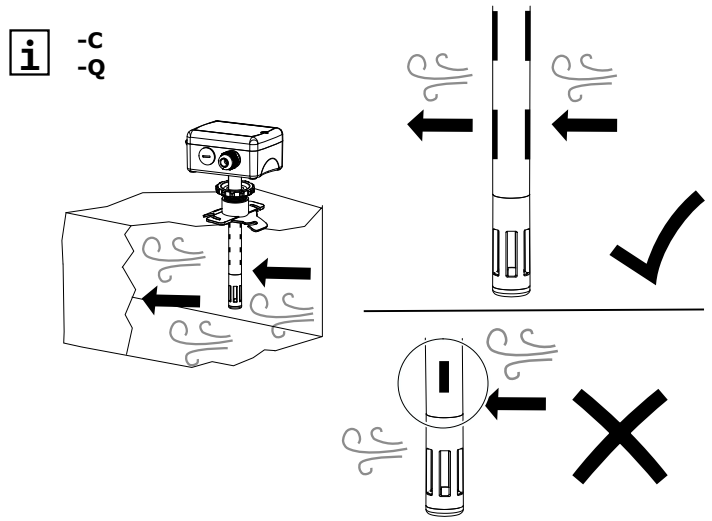

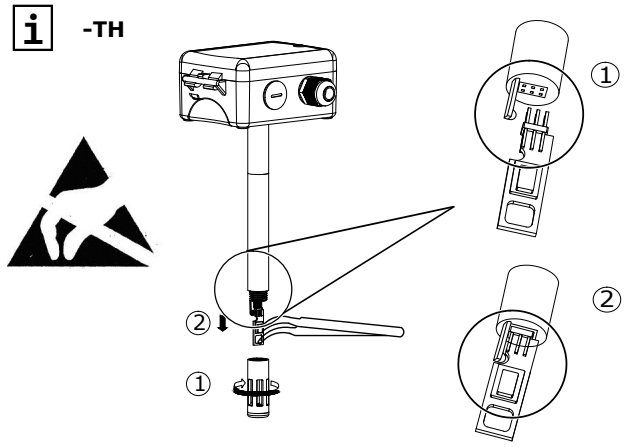

E 24V AC/DC

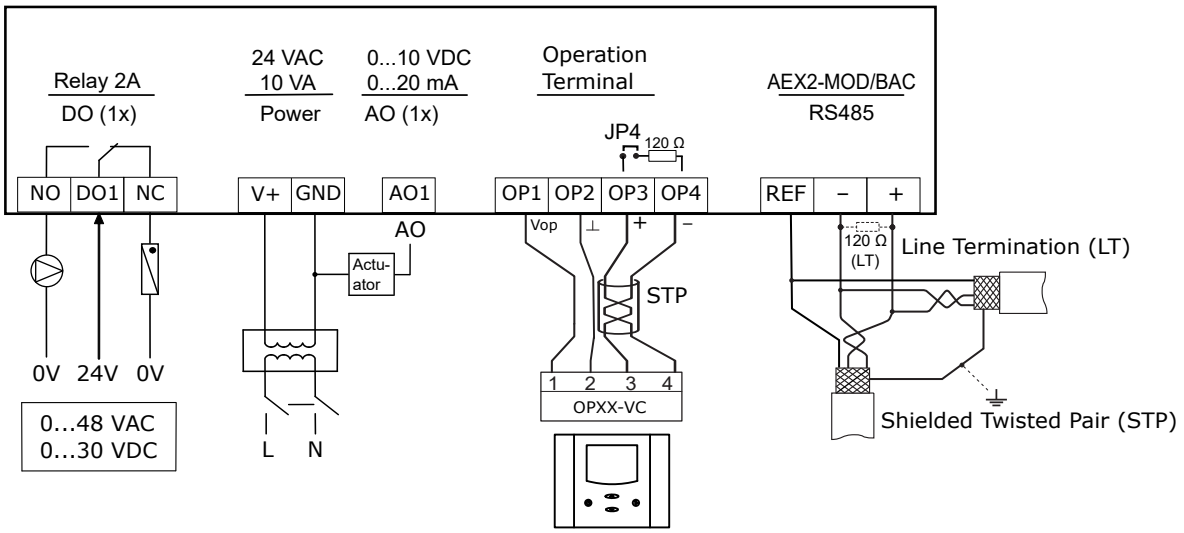

F Easyset

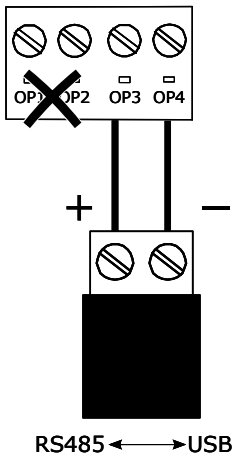

G Master-Slave (max. 8x SDC2, 1x OPxx-VC)

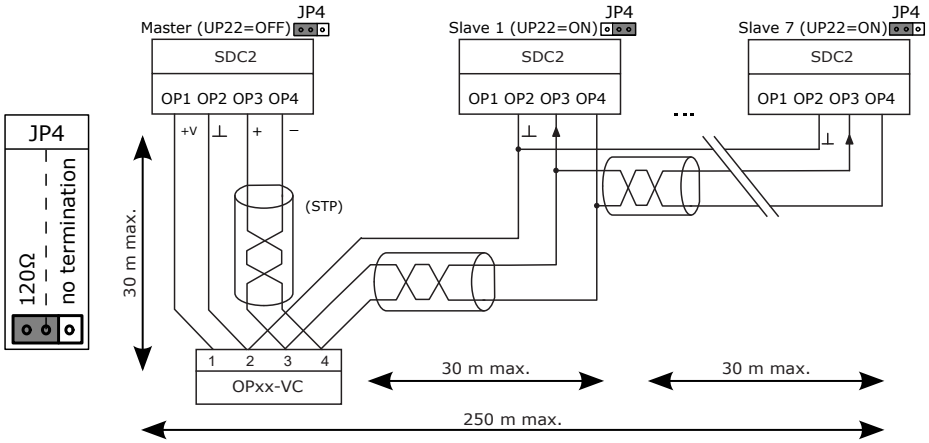

www.vectorcontrols.com

© Vector Controls GmbH, Switzerland