TLC3-FCM-R2 -U
Programmable PI Fan Coil controller

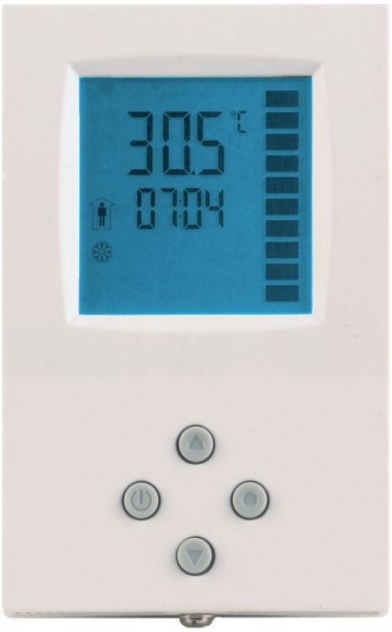

Features

- Proven PI controls algorithm reduces room temperature fluctuations and energy consumption
- Low power energy consumption: < 0.5 W per unit
- Temperature control for 2- and 4-pipe fan coil systems.
- Automatic fan control for EC fans.
- Cost saving option with Economy functionality and set point limitations
- Control for modulating heating, cooling and fan only operation modes
- Password protected programmable user and control parameters
    - Setpoint range limitation
    - Access control for setpoints, fan speeds and mode change
    - Access control for heat/cool change and time programs
    - Select your display contents
    - Selectable behavior after return from power failure
- Temperature display in Celsius or Fahrenheit

Deluxe Version:

- Clock and time schedule functions with power failure protection
- Blue backlight for LCD
- Infrared remote controller option:
  With special features for Boost and delayed switching on or off

Applications

- Air Only Systems:
    - Constant or Variable Air Volume systems with three stage fans for single or dual duct systems
- Air/Water Systems:
    - Fan Coil units for 2-pipe or 4-pipe systems
    - radiator control, chilled ceiling
- Simple individual room control for hotel rooms, meeting rooms, etc.
- PI-Control of up to 2 modulating valves for heating and cooling

General Description

The **TLC3-FCM-R2-T** is a stand-alone electronic fan coil controller with one control loop. The TLC3-FCM-R2-T is designed for EC fan coil systems and features 1 internal NTC temperature sensor, one external passive input for temperature or open contact, two binary outputs (Relays) and one analog output (0-10VDC) for fan control.

The **TLC3-FCM2-R2** is a stand-alone electronic fan coil controller with one control loop. The TLC3-FCM2-R2 is designed for EC fan coil systems and features 1 internal NTC temperature sensor, two binary outputs and two analog outputs (0-10VDC) one for fan control and one for a heating or cooling valve.

A detailed parameterization is possible with the use of a simple configuration routine. The TLC3-FCM-R2 can be configured using the standard operation terminal. No special tools or software is required.

Ordering

Item Name	Item code	Variant	Power	Features
TLC3-FCM-R2-T-U-230	40-100277	Standard	230VAC	Fan coil controller (US Edition) with: 1 TI int 1 external input (NTC) 2 DO (Relay) 1 AO (0-10VDC)

Selection of sensors

Use only our approved NTC sensors to achieve maximum accuracy. Recommended is SDBTn10-15 as Duct sensor, SRA-Tn10 as Room sensor and SDB-Tn10-15+AMI-10 as immersion sensor.

Selection of fans

Do not directly connect devices that exceed 2A. Observe startup current on inductive loads! Do not connect more than one fan coil unit to one controller.

Modulating Actuators:

Choose actuators with an input signal type of 0-10V DC or 2-10V DC. Observe maximal signal current of 1mA!

© Vector Controls LLC, USA

Technical Specification

Caution! This device is intended to be used for comfort applications. Where a device failure endangers human life and/or property, it is the responsibility of the owner, designer and installer to add additional safety devices to prevent or detect a system failure caused by such a device failure. Vector Controls or its affiliates cannot be held liable for any damage caused by such a failure. Failure to follow specifications and local regulations may endanger life, cause equipment damage and void warranty.

Power Supply	Operating Voltage	210–250 VAC
	Power Consumption	Max 1W, 1.5 VA
	Electrical Connection	Terminal Connectors
	Deluxe type only: Power backup for real time clock	Min 48h if charged for 24h
Signal Inputs	Temperature Inputs Range Accuracy	RT Internal, External (Sxx-Tn10 sensor) 0…50 °C (32…122 °F) 0.5°C (1°F)
Signal Outputs	Digital Switching Outputs Switching Type AC Switching power Insulation strength between relays contacts and system electronics: between neighboring relays contacts	DO1, DO2 Relays 2A max. each output 3750V AC to EN 60 730-1 1250V AC to EN 60 730-1
	Analog Outputs Output Signal Resolution Minimum impedance	AO1, For TLC3-FCM2-R2 AO2 DC 0…10 V 9.76 mV (10 bit) 10kOhm, 1mA.
Environment	Operation Climatic Conditions Temperature Humidity	To IEC 721-3-3 class 3 K5 0°C …50°C (32°F…122°F) <95% R.H. non-condensing
	Transport & Storage Climatic Conditions Temperature Humidity Mechanical Conditions	To IEC 721-3-2 and IEC 721-3-1 class 3 K3 and class 1 K3 -25°C…70°C (-13°F…158°F) <95% R.H. non-condensing class 2M2
Standards	CE conformity EMC Directive Low Voltage Directive	 2004/108/EC 2006/95/EC
	Product standards Automatic electrical controls for household and similar use Special requirement on temperature dependent controls	 EN 60 730 –1 EN 60 730 – 2 - 9
	Electromagnetic compatibility for domestic sector	Emissions: EN 60 730-1 Immunity: EN 60 730-1
	Degree of Protection	IP30 to EN 60 529
	Pollution Class	II (EN 60 730-1)
	Safety Class:	II (IEC 60 536)
	Overvoltage Category:	III (EN 60 730-1)
General	Dimensions (H x W x D) Front part: Power case:	112 x 73 x 32mm (4.4 x 2.9 x 1.3 in) 60 x 50 x 32mm (2.4 x 2.0 x 1.3 in)
	Material: Cover, back part Mounting Plate	ABS plastic (UL94 class V-0) Aluminum
	Weight (including package)	Standard: 245g (8.6oz), Deluxe: 255g (9.0oz)

© Vector Controls LLC, USA

Dimensions

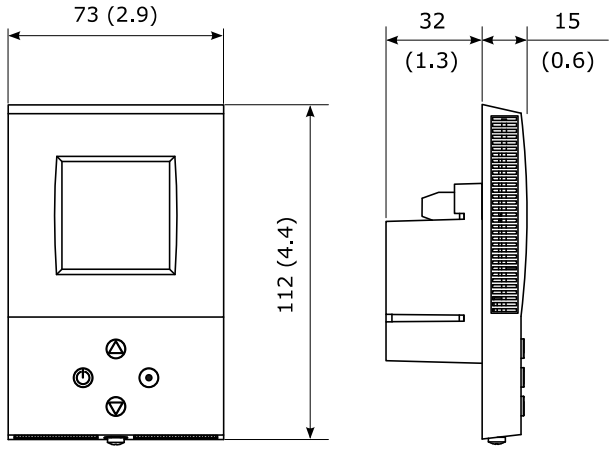

Space required in flush mounting box:
(H x W x D)
60 x 50 x 32 mm (2.4 x 2.0 x 1.3 in)

Distance for mounting screws:
Horizontal 57 to 61 mm (2.25 to 2.63 in)
Vertical 70 to 92 mm (2.75 to 3.62 in)

Wiring Diagram

TLC3-FCM2-R2-U-230

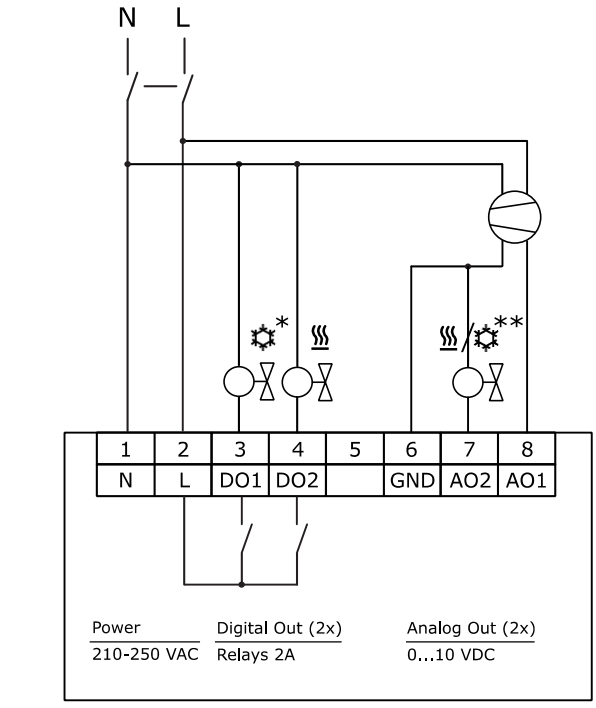

*) FC11 = 2, ♨/☼ **) FC27 = ♨/☼

© Vector Controls LLC, USA

TLC3-FCM-R2-T-U-230

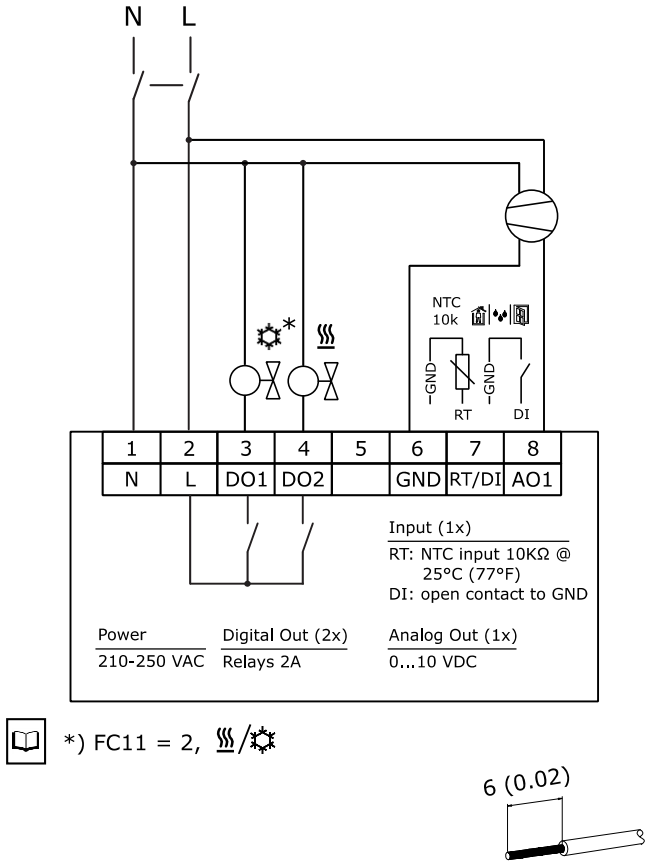

Description:

Terminal	Signal	Type	Function
1	N	Power supply: 230V Neutral	
2	L	Power supply: 230V Line	
3	DO1	Digital output 230V AC	Valve Cooling or 2-pipe
4	DO2	Digital output 230V AC	Valve Heating
5		Not used	Not used
TLC3-FCM2-R2-U:			
6	GND	Signal common:	
7	AO2	Analog output 0…10 VDC	Heating or cooling based on FC27
8	AO1	Analog output 0…10 VDC	Fan
TLC3-FCM-R2-T-U:			
6	GND	Signal common:	
7	RT/DI	Input NTC 10kΩ @ 25°C (77°F) or open contact to GND	
8	AO1	Analog output 0…10 VDC	Fan

Mounting and installation

Mount the controller on an interior wall, approx. 1.5 m above the floor, in a place with average room temperature. Avoid direct sunlight, heat sources, doors, outside walls and air outlets. The location is less critical if an external temperature sensor is used.

Mount and connect the controller as shown in the installation sheet supplied with the device, and wire it according to the connection diagram above.

© Vector Controls LLC, USA

Display and Operation

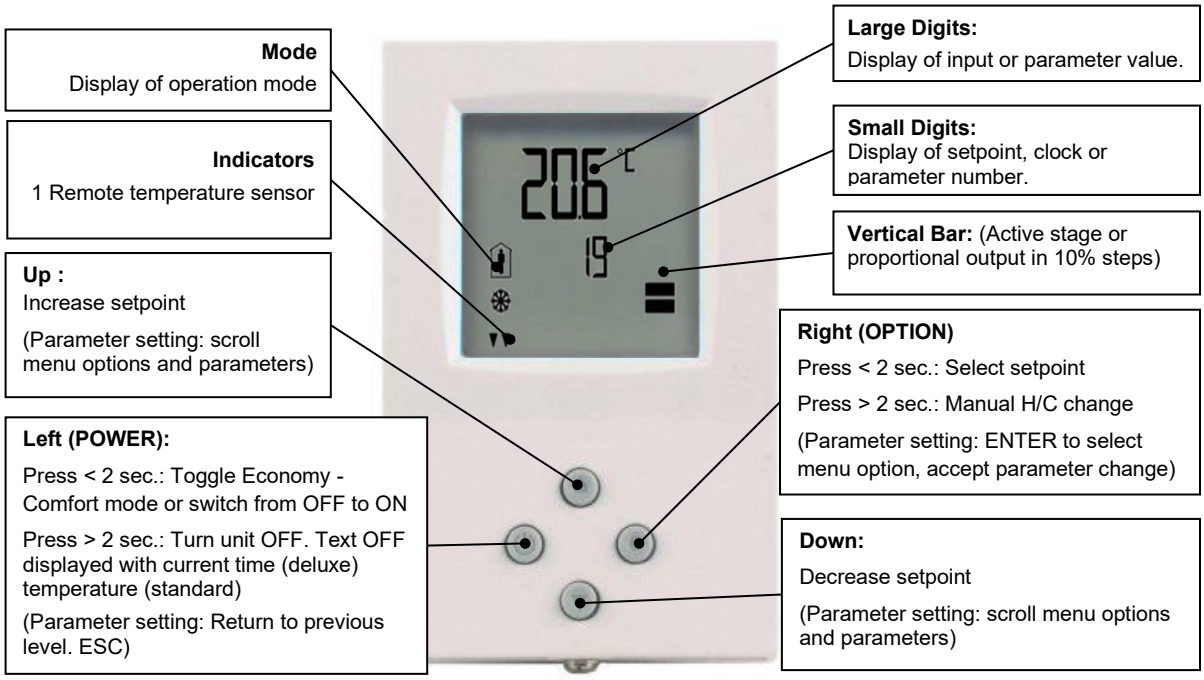

Operation mode		
	Comfort (occupied)	All control functions operating per set points.
	Economy (unoccupied):	Set points shifted according to *Parameters FC04.* Economy mode and setpoint shift may be disabled with UP06
OFF	Energy Hold Off	Outputs are off, inputs monitored for alarm condition
	Heating	Output activates if temperature lower than setpoint
	Cooling	Output activates if temperature higher than setpoint
	Fan	Fan is running, the vertical bars show active speed 1-3
	Manual mode	Manual override of fan speed, fan only mode or override of time schedule active.
	Schedule	Deluxe only: Time schedule is active

Power Failure

All the parameters and set points are memorized and do not need to be reentered. Depending on **UP05** the unit will remain switched off, switch on automatically or return to the operation mode it was in before the power failure.

Deluxe version only: Timer operation and daytime setting will be retained for 24h. The controller has to be connected to a power supply for at least 10 hours for the backup function to operate accordingly.

Frost Protection

The controller will enter frost protection mode if the room temperature drops below 5°C (41°F). All heating outputs will be fully opened. Frost protection mode will be left once the temperature reaches 10°C (50°F). Frost protection display will remain until a button is pressed. Frost protection can be enabled/disabled using user parameter UP-09

Error messages

Following error condition may be shown:

Err1: The connection to the temperature sensor may be interrupted or the temperature sensor is damaged. The output is switched off. Verify parameter settings and wiring.

FP: Steady: Frost protection is active.
Blinking: Frost protection activated in the past and is now inactive. Confirm with OPTION key.

© Vector Controls LLC, USA

Manual heat – cool change

To manually change heating or cooling mode press the OPTION key for more than 2 seconds. Access to manual heat – cool change may be disabled by parameters.

For standard models: Press OPTION > 2 sec. SEL and H-C is displayed. For deluxe models: Press OPTION > 2 sec. SEL and current time is displayed. Press UP key twice. SEL and H-C is displayed. Press OPTION again to toggle Heating, Cooling and Fan only modes.	SEL H-C

Clock operation

The deluxe model contains a quartz clock with battery back-up. Up to 4 time schedules with each 4 mode changes based on time and day of the week may be programmed. A blinking clock indicates that the time has not been set or if the unit was without power for longer than 48 hours. The time needs to be set to allow time schedules to operate.

Clock setup

Press OPTION > 2 sec. SEL and current time displayed Press OPTION < 2 sec. to change time, Minutes blink: UP/DOWN to changes, OPTION to save, Hours blink: UP/DOWN to changes, OPTION to save, Press OPTION to save time, DAY1 blinks: UP/DOWN to change, OPTION to save	SEL 00:00 DAY1 (Mon)

Creating time schedules

Step 1: Selection and enabling of time schedules

Press OPTION > 2 sec. SEL and current time displayed Press UP: SEL and PRO displayed, clock symbol blinks Press OPTION: PRO1 shows with 1 blinking. UP/DOWN select time schedule group Press OPTION OFF/ ON blinks, UP/DOWN to change, OPTION to save	SEL PRO	Pro1-Pro4 OFF/ON

Step 2: Select weekdays

This time schedule will be active during the selected weekdays Press UP/DOWN to step through available options: d1-7, d1-6, d1-5, d6-7, day1, day2, day3, day4, day5, day6, day7 Day 1 stands for Monday, day 2 for Tuesday and so forth Press OPTION to save day selection	Pro1 d1-7

Step 3: Selected action of first switching event

One bar on the right side indicates the first switching event Press UP/DOWN to select action for first switching event: No = switching event not active OFF = switches unit off, Reset (UP17) active if switched to ON manually. Eco = sets operation mode to On and Economy (Not occupied), reset (UP17) active if set to comfort manually On = sets operation mode to On and Comfort (Occupied) Uni = University mode, Reset (UP17) not active if manually activated Press OPTION to select switching time of first event	Pr01 no ▬

Step 4: Selected time of first switching event

Press UP/DOWN to select switching time: Select switching time 00:00 to 23:45 in 15-minute steps Press OPTION to complete and select action of second switching event	Pr01 08:00 ▬

Step 5: Select actions and time of switching event 2 - 4

Repeat Step 3 and Step 4 for the remaining switching events. If a switching event is not needed, set it to "no" The bars on the right side indicate number of switching event After completing the 4th switching event, the process returns to the selection of the time schedule on step 1.	Pr01 08:00 ▬ ▬ ▬

- ➔ UNI: University mode: This switching mode is used for rooms such as lecture rooms and auditoriums that might be occupied during a certain time. During this time the reset is not active. The unit will not start itself when UNI mode is active. It still needs to be manually activated. This is to avoid unnecessary heating or cooling of such rooms while they are not occupied.
- ➔ A blinking clock indicates that the time needs to be set. Time programs will not operate if the time is not defined. See chapter operation, advanced settings for instructions on how to set the time.
- ➔ Access to time schedules may be disabled with UP-04

© Vector Controls LLC, USA

Operation with OPR-1

The deluxe version may be alternatively operated with an infrared remote controller.

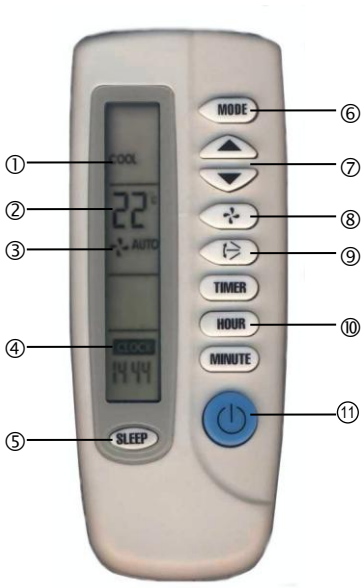

1. Mode indication, Auto, Dry, Cool, Fan, Heat
2. 2-digit display of setpoint
3. Fan indication
4. 4-digit display of current time or delayed switching time
5. Economy button: Toggles Economy/Comfort mode
6. Mode button, changes operation modes
7. UP/DOWN Button: Set point adjustment buttons
8. FAN Button: Changes fan speed, low – medium – high or Auto
9. Boost button, activates full output for 5 Minutes
10. Time related buttons: Timer, Hour, Minute
11. POWER Button: Operation mode ON – OFF

Switching ON

The unit is switched on by pressing the POWER button. It will start up in comfort mode.

Changing between COMFORT and ECONOMY

Pressing the SLEEP button toggles between ECONOMY and COMFORT modes.

Switching OFF

Pressing the POWER while the unit is on, will switch the unit off. The current time will be displayed in the LCD of OPR-1.

Changing of set points

Only the set points for the temperature loop may be changed. Set point range is 15 to 30 °C.

Changing of fan speeds

Repeatedly pressing the fan speed button steps through low, medium, high and automatic fan speeds. Automatic fan speed will not be activated in FAN ONLY mode.

Boost

Pressing the boost button activates a 5 minute boost. The output will be fully opened for the period of 5 minutes independent of demand. This may be used to change stale air during a meeting break or when entering the room.

Clock settings

The remote controller contains a daytime clock. In order to set the clock, press HOUR and MINUTE button together until the clock starts blinking. Then set the correct time with the HOUR and MINUTE buttons. Confirm by pressing the TIMER button. The clock of the OPR will set the clock of the controller.

Delayed switching

The unit may be delayed switched on or off using the timer button. Pressing the timer button once will display Timer ON if currently in OFF mode or TIMER OFF if currently in ON mode. Set the time when the unit is supposed to switch on or off using the HOUR and MINUTE buttons.

Mode changes

Repeatedly pressing the mode button may activate the following operation modes: HEAT, COOL and FAN ONLY. The mode change may be disabled using the UP parameters.

Note:

The remote controller is currently only available in °C mode.

© Vector Controls LLC, USA

Smart Sensors and Controls
Made Easy!

Quality - Innovation – Partnership

Vector Controls LLC
USA

infous@vectorcontrols.com
www.vectorcontrols.com

© Vector Controls LLC, USA