TLC3-FCR-T
Intelligent Fan Coil Controller

Features



- Temperature control for 2-pipe fan coil systems: heating, cooling or fan only
- Automatic or manual control of 3-speed fans
- On-off or PWM control for reduced room temperature fluctuations
- External input: remote NTC sensor, occupancy or key card contact, heat-cool changeover
- Economy mode and setpoint limits for energy saving
- Password-protected user and control parameters
- Low power consumption < 1 W, display in °C or °F
- Deluxe version: clock with time schedules, blue backlight, infrared remote control option

Applications

- Fan coil units in 2-pipe systems, radiators and chilled ceilings
- Constant air volume systems with 3-stage fans
- Individual room control in hotel rooms, meeting rooms and offices
- On-off or PWM control of 2 spring return valves, or on-off or floating control of one 3-point valve

General Description

The TLC3-FCR-T is a stand-alone electronic fan coil controller with one control loop, 1 internal NTC temperature sensor, 1 external NTC or contact input and 4 relay outputs. It is configured with the standard operation terminal; no special tools or software are required.

Ordering

Item Name	Item code	Variant	Power	Features
TLC3-FCR-T TLC3-FCR-T-W01	40-10 0129 40-10 0129-01	Standard Cooling only	24VAC/DC	Fan coil controller with: 1 TI int or ext 3 DO (Relay) Fan control 1 DO (Relay) Binary valve control
TLC3-FCR-T-230 TLC3-FCR-T-230-W01	40-10 0114 40-10 0114-01	Standard Cooling only	230VAC	
TLC3-FCR-T-D-24 TLC3-FCR-T-D-24-W01	40-10 0134 40-10 0134-01	Deluxe Cooling only	24VAC/DC	
TLC3-FCR-T-D-230 TLC3-FCR-T-D-230-W01	40-10 0115 40-10 0115-01	Deluxe Cooling only	230VAC	

Wiring Diagram

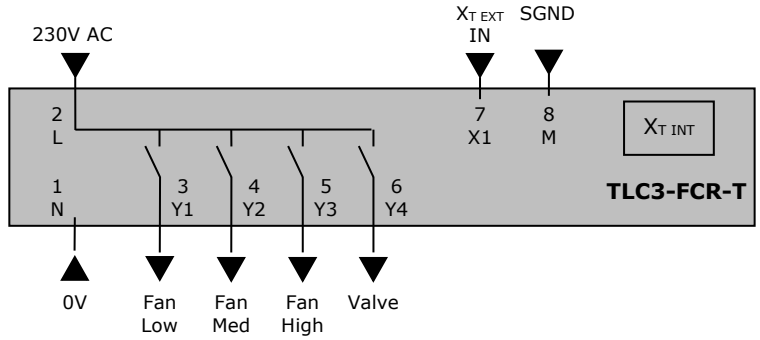

N	Power supply 0 V (neutral)	**Y1**	Relay output: fan speed low
L	Power supply 230 VAC	**Y2**	Relay output: fan speed medium
X1	Ext. input: NTC 10 kΩ or contact	**Y3**	Relay output: fan speed high
M	Signal common (SGND)	**Y4**	Relay output: valve

© Vector Controls GmbH, Switzerland

Technical Specification

Caution! This device is intended to be used for comfort applications. Where a device failure endangers human life and/or property, it is the responsibility of the owner, designer and installer to add additional safety devices to prevent or detect a system failure caused by such a device failure. Vector Controls or its affiliates cannot be held liable for any damage caused by such a failure. Failure to follow specifications and local regulations may endanger life, cause equipment damage and void warranty.

Power Supply	Operating Voltage		-24	-230
	AC voltage: 50/60Hz		22-26V AC/DC	210–250 VAC
	Power Consumption		Max 1W, 1.5 VA	
	Electrical Connection		Terminal Connectors	
	Deluxe type only: Power backup for real time clock		Min 48h if charged for 24h	
Signal Inputs	Temperature Inputs Range Accuracy		RT Internal, External (Sxx-Tn10 sensor) 0…50 °C (32…122 °F) 0.5°C (1°F)	
Signal Outputs	Digital Switching Outputs Switching Type Max. Switching power		DO1 to DO4 Relays 1385VA / 150W each output	
	Insulation strength between relays contacts and system electronics: between neighboring relays contacts		For -230 types only 4000V AC to EN 60 730-1 1000V AC to EN 60 730-1	
Environment	Operation Climatic Conditions Temperature Humidity		To IEC 721-3-3 class 3 K5 0°C …50°C (32°F…122°F) <95% R.H. non-condensing	
	Transport & Storage Climatic Conditions Temperature Humidity Mechanical Conditions		To IEC 721-3-2 and IEC 721-3-1 class 3 K3 and class 1 K3 -25°C…70°C (-13°F…158°F) <95% R.H. non-condensing class 2M2	
Standards	CE conformity EMC Directive Low Voltage Directive		 2004/108/EC 2006/95/EC	
	Product standards Automatic electrical controls for household and similar use Special requirement on temperature dependent controls		 EN 60 730 –1 EN 60 730 – 2 - 9	
	Electromagnetic compatibility for domestic sector		Emissions: EN 60 730-1 Immunity: EN 60 730-1	
	Degree of Protection		IP30 to EN 60 529	
	Pollution Class		II (EN 60 730-1)	
	Safety Class:	for -24 types for -120 and -230 types	III (IEC 60 536) II (IEC 60 536)	
	Overvoltage Category:	for -24 types for -120 and -230 types	I (EN 60 730-1) III (EN 60 730-1)	
General	Dimensions (H x W x D)	Front: Power case:	21 x 88 x 88mm (0.8 x 3.5 x 3.5 in.) 60 x 50 x 32mm (2.4 x 2.0 x 1.3 in)	
	Material:	Cover, back part Mounting Plate	ABS plastic (UL94 class V-0) Galvanized Steel	
	Weight (including package)	for -24 types for -120 and -230 types	standard: 265g (9.3oz), deluxe: 275g (9.7oz) standard: 295g (10.5oz), deluxe: 305g (10.8oz)	

© Vector Controls GmbH, Switzerland

Dimensions

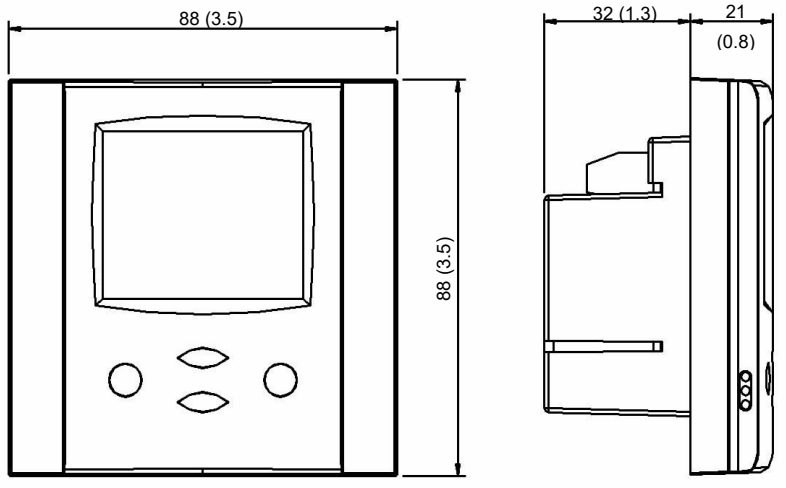

Space required in flush mounting box:
(H x W x D)
60 x 50 x 32mm (2.4 x 2.0 x 1.26 in.)

Distance for mounting screws:
Horizontal and vertical:
45 to 63mm (1.8 to 2.5 in.)

Selection of actuators, fans and sensors

Temperature Sensors: Use only our approved NTC sensors to achieve maximum accuracy. Recommended is SDB-Tn10-15 as Duct sensor, SRA-Tn10 as Room sensor and SDB-Tn10-15+AMI-10 as immersion sensor.

Binary auxiliary devices: E.g. fans, on/off valves, etc. Do not directly connect devices that exceed switching power. Observe startup current on inductive loads! Do not connect more than one fan coil unit to one controller.

Mounting and installation

Mount the controller on an interior wall, approx. 1.5 m above the floor, in a place with average room temperature. Avoid direct sunlight, heat sources, doors, outside walls and air outlets. The location is less critical if an external temperature sensor is used.

Mount and connect the controller as shown in the installation sheet supplied with the device, and wire it according to the wiring diagram on page 1.

© Vector Controls GmbH, Switzerland

Display and Operation

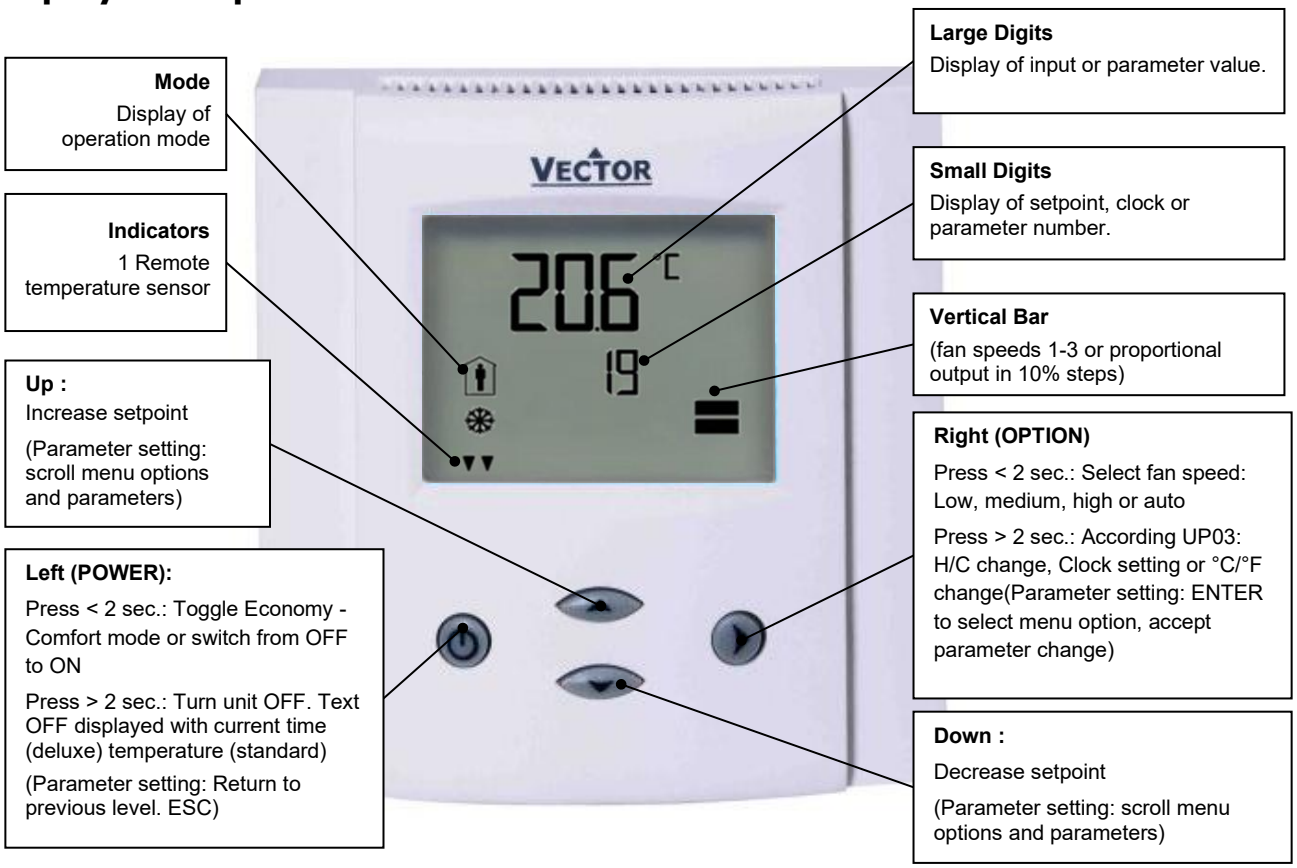

Operation mode		
	Comfort (occupied)	All control functions operating per set points.
	Economy (unoccupied):	Set points shifted according to *Parameters FC04.* Economy mode and setpoint shift may be disabled with UP06
OFF	Energy Hold Off	Outputs are off, inputs monitored for alarm condition
	Heating	Output activates if temperature lower than setpoint
	Cooling	Output activates if temperature higher than setpoint
	Fan	Fan is running, the vertical bars show active speed 1-3
	Manual mode	Manual override of fan speed, fan only mode or override of time schedule active.
	Schedule	Deluxe only: Time schedule is active

Power Failure

All the parameters and set points are memorized and do not need to be reentered. Depending on **UP05** the unit will remain switched off, switch on automatically or return to the operation mode it was in before the power failure.

Deluxe version only: Timer operation and daytime setting will be retained for 24h. The controller has to be connected to a power supply for at least 10 hours for the backup function to operate accordingly.

Frost Protection

The controller will enter frost protection mode if the room temperature drops below 5°C (41°F). All heating outputs will be fully opened. Frost protection mode will be left once the temperature reaches 10°C (50°F). Frost protection display will remain until a button is pressed. Frost protection can be enabled/disabled using user parameter UP-09

Toggle °C/°F display with one key press

Setting UP03 = 4 allows changing °C/°F by pressing the right key for more than 2 seconds.
Note: This setting disables access to clock settings and manual heat cool change.

Error messages

Following error condition may be shown:

Err1: Error temperature sensor. The temperature sensor may be damaged or not present. Verify wiring or setup.

Err2: External input for heat / cool auto-change-over missing or damaged. Verify wiring or setup.

FP: Steady: Frost protection is active.
Blinking: Frost protection activated in the past and is now inactive. Confirm with OPTION key.

© Vector Controls GmbH, Switzerland

Manual heat – cool change

To manually change heating or cooling mode press the OPTION key for more than 2 seconds. Access to manual heat – cool change may be disabled by parameters.

Precondition: UP03 must be set = 1 or 3. For standard models: Press OPTION > 2 sec. SEL and H-C is displayed. For deluxe models: Press OPTION > 2 sec. SEL and current time is displayed. Press UP key twice. SEL and H-C is displayed. Press OPTION again to toggle Heating, Cooling and Fan only modes.	SEL H-C 

Clock operation

The deluxe model contains a quartz clock with battery back-up. Up to 4 time schedules with each 4 mode changes based on time and day of the week may be programmed. A blinking clock indicates that the time has not been set or if the unit was without power for longer than 48 hours. The time needs to be set to allow time schedules to operate.

Clock setup

Precondition: UP03 must be set = 2 or 3. Press OPTION > 2 sec. SEL and current time displayed Press OPTION < 2 sec. to change time, Minutes blink: UP/DOWN to changes, OPTION to save, Hours blink: UP/DOWN to changes, OPTION to save, Press OPTION to save time, DAY1 blinks: UP/DOWN to change, OPTION to save	SEL 00:00 DAY1 (Mon)

© Vector Controls GmbH, Switzerland

Creating time schedules

Step 1: Selection and enabling of time schedules

Precondition: UP03 must be set = 2 or 3. Press OPTION > 2 sec. SEL and current time displayed Press UP: SEL and PRO displayed, clock symbol blinks Press OPTION: PRO1 shows with 1 blinking. UP/DOWN select time schedule group Press OPTION OFF/ ON blinks, UP/DOWN to change, OPTION to save	SEL PRO 	Pro1-Pro4 OFF/ON

Step 2: Select weekdays

This time schedule will be active during the selected weekdays Press UP/DOWN to step through available options: d1-7, d1-6, d1-5, d6-7, day1, day2, day3, day4, day5, day6, day7 Day 1 stands for Monday, day 2 for Tuesday and so forth Press OPTION to save day selection	Pro1 d1-7

Step 3: Selected action of first switching event

One bar on the right side indicates the first switching event Press UP/DOWN to select action for first switching event: No = switching event not active OFF = switches unit off, Reset (UP14) active if switched to ON manually. Eco = sets operation mode to On and Economy (Not occupied), reset (UP14) active if set to comfort manually On = sets operation mode to On and Comfort (Occupied) Uni = University mode, Reset (UP14) not active if manually activated Press OPTION to select switching time of first event	Pr01 no 

Step 4: Selected time of first switching event

Press UP/DOWN to select switching time: Select switching time 00:00 to 23:45 in 15-minute steps Press OPTION to complete and select action of second switching event	Pr01 08:00 

Step 5: Select actions and time of switching event 2 - 4

Repeat Step 3 and Step 4 for the remaining switching events. If a switching event is not needed, set it to "no" The bars on the right side indicate number of switching event After completing the 4th switching event, the process returns to step 1.	Pr01 08:00 

➔ UNI: University mode: This switching mode is used for rooms such as lecture rooms and auditoriums that might be occupied during a certain time. During this time the reset is not active. The unit will not start itself when UNI mode is active. It still needs to be manually activated. This is to avoid unnecessary heating or cooling of such rooms while they are not occupied.

➔ A blinking clock indicates that the time needs to be set. Time programs will not operate if the time is not defined. See chapter operation, advanced settings for instructions on how to set the time.

➔ Access to time schedules may be disabled with UP-04

© Vector Controls GmbH, Switzerland

Operation with OPR-1

The deluxe version may be alternatively operated with an infrared remote controller.

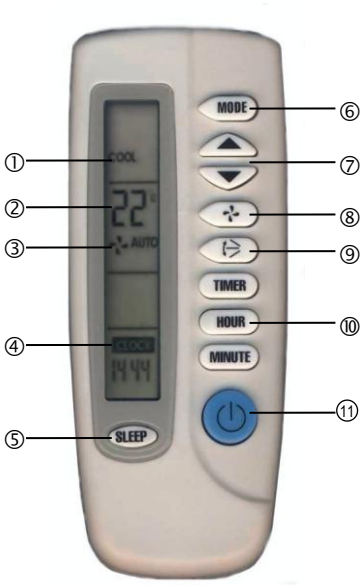

1. Mode indication, Auto, Dry, Cool, Fan, Heat
2. 2-digit display of setpoint
3. Fan indication
4. 4-digit display of current time or delayed switching time
5. Economy button: Toggles Economy/Comfort mode
6. Mode button, changes operation modes
7. UP/DOWN Button: Set point adjustment buttons
8. FAN Button: Changes fan speed, low – medium – high or Auto
9. Boost button, activates full output for 5 Minutes
10. Time related buttons: Timer, Hour, Minute
11. POWER Button: Operation mode ON – OFF

Switching ON

The unit is switched on by pressing the POWER button. It will start up in comfort mode.

Changing between COMFORT and ECONOMY

Pressing the SLEEP button toggles between ECONOMY and COMFORT modes.

Switching OFF

Pressing the POWER while the unit is on, will switch the unit off. The current time will be displayed in the LCD of OPR-1.

Changing of set points

Only the set points for the temperature loop may be changed. Set point range is 15 to 30 °C.

Changing of fan speeds

Repeatedly pressing the fan speed button steps through low, medium, high and automatic fan speeds. Automatic fan speed will not be activated in FAN ONLY mode.

Boost

Pressing the boost button activates a 5 minute boost. The output will be fully opened for the period of 5 minutes independent of demand. This may be used to change stale air during a meeting break or when entering the room.

Clock settings

The remote controller contains a daytime clock. In order to set the clock, press HOUR and MINUTE button together until the clock starts blinking. Then set the correct time with the HOUR and MINUTE buttons. Confirm by pressing the TIMER button. The clock of the OPR will set the clock of the controller.

Delayed switching

The unit may be delayed switched on or off using the timer button. Pressing the timer button once will display Timer ON if currently in OFF mode or TIMER OFF if currently in ON mode. Set the time when the unit is supposed to switch on or off using the HOUR and MINUTE buttons.

Mode changes

Repeatedly pressing the mode button may activate the following operation modes: HEAT, COOL and FAN ONLY. The mode change may be disabled using the UP parameters.

Note:

The remote controller is currently only available in °C mode.

© Vector Controls GmbH, Switzerland

Smart Sensors and Controls
Made Easy!

Quality - Innovation – Partnership

Vector Controls GmbH
Switzerland

info@vectorcontrols.com
www.vectorcontrols.com/

© Vector Controls GmbH, Switzerland