TCI-W11, TCI-W22 Series Wall Mounted Universal Controller

Features

- Universal PID and/or binary control for any analog input/output signal and range.
- Multiple auxiliary functions: heat-cool auto changeover, automatic enable, setpoint compensation.
- Differential, averaging, min and max functions
- Cascading of control loops (-W22 type).
- Alarm monitoring of low and high limits on all inputs.
- Programmable reaction in case of alarm.
- Feedback function for inputs and set points.
- Functions for dehumidifying, set point shift, cascade control.
- Password protected programmable user and control parameters.

TCI-W22 also includes

- Blue backlight.
- Power Cap protected real-time clock with 48hr power backup.
- Clock with up to 8 switching events.
- 7-day programmable schedules, with options including change of setpoints and direct position of manual outputs.



TCI-W11



TCI-W22

Applications

- Fan coil units
- Heat exchangers
- Zoning
- VAV
- Air handlers
- Fan, Pump control
- Humidifiers
- Dehumidifiers
- Ventilation
- Radiant heating
- Radiant cooling
- Pressurization

General

- **TCI-W11**: 1 independent control loop, 1 internal temperature sensor, 1 universal input (analog/binary/temp), 2 binary/PWM outputs, 1 analog output
- **TCI-W22**: 2 independent control loops, 8 time schedules, 1 internal temperature sensor, 2 universal inputs, 2 binary/PWM outputs, 1 analog output
- Internal temperature sensor standard. Add replaceable humidity element as required: AES3-HT-A2 (2%), AES3-HT-A3 (3%), or AES3-HT-A5 (5%)
- Flexible application configuration is made with a parameter-setting routine using the standard operation terminal.

Product Name

T C I - W 2 2 - U

Housing	Blank = square housing
In/Outputs:	See table below
Control loops:	1 = 1 control loop, 2 = 2 control loops
Mounting:	W = Wall mounted
Series:	**TCI**

Types and Ordering

Product Name	Product No.	Loop	Temperature Sensor (internal)	Humidity Sensor (internal)	Universal Input	Binary Output	Analog Output	Time Schedules	Option
TCI-W11	40-10 0257	1	1	0	1	2	1	0	Standard
TCI-W11-H	40-10 0258			1					rH Sensor 3% acc.
TCI-W22	40-10 0261	2		0	2			8	Time schedules
TCI-W22-H	40-10 0262			1					rH Sensor 3% acc.
AES3-HT-A2	40-50 0102			1					rH Sensor 2% acc.
AES3-HT-A3	40-50 0103			1					rH Sensor 3% acc.
AES3-HT-A5	40-50 0104			1					rH Sensor 5% acc.

© Vector Controls GmbH, Switzerland

Technical specifications

Caution! This device is intended to be used for comfort applications. Where a device failure endangers human life and/or property, it is the responsibility of the owner, designer and installer to add additional safety devices to prevent or detect a system failure caused by such a device failure. Vector Controls or its affiliates cannot be held liable for any damage caused by such a failure. Failure to follow specifications and local regulations may endanger life, cause equipment damage and void warranty.

Power Supply	Power Requirements	24 VAC ±10%, 50/60 Hz, Class 2, 2.0 A, 48 VA max. 24 VDC ±10%
	Power Consumption	Max. 3 VA
	Electrical Connection	Terminal Connectors 0.34…2.5 mm² wire (AWG 24…12)
	Clock backup	Min. 48 hours
Signal inputs	Universal Input Input Signal Resolution Impedance	Setting for Voltage or Current 0–10 V or 0–20 mA 9.76 mV or 0.019 mA (10 bit) Voltage: 98kΩ Current: 240Ω
	Universal Input Range Accuracy	Input configured to remote temperature (RT) or digital input (DI) NTC (Sxx-Tn10 sensor): -40…140 °C (-40…284 °F) -40…0 °C (-40…32 °F): 0.5 K 0…50 °C (32…122 °F): 0.2 K 50…100 °C (122…212 °F): 0.5 K > 100 °C (> 212 °F): 1 K
	Humidity Sensor AES3-HT-Ax: Range Measuring Accuracy Hysteresis Repeatability Stability	Capacity sensor 0…100 % rH See Figure to the right ± 1% ± 0.1% < 0.5% / year
Signal outputs	Analog Output Output Signal Resolution Maximum Load	 DC 0–10 V / 0–20 mA 9.76 mV / 0.019 mA Voltage: ⩾1kΩ Current: ⩽250Ω
	Relays Outputs AC Voltage DC Voltage	 0…48 VAC, 2(1.2)A max. (Observe local regulation) 0…30 VDC, 2A max.
	Insulation strength between relays contacts and system electronics: between neighboring contacts:	 2000V AC to EN 60 730-1 1250V AC to EN 60 730-1
Environment	Operation Climatic Conditions Temperature Humidity	To IEC 721-3-3 class 3 K5 0…50 °C (32…122 °F) <95 % RH non-condensing
	Transport & Storage Climatic Conditions Temperature Humidity Mechanical Conditions	To IEC 721-3-2 and IEC 721-3-1 class 3 K3 and class 1 K3 -25…70 °C (-13…158 °F) <95 % RH non-condensing class 2M2
Standards	Degree of Protection	IP30 to EN 60 529
	Pollution Class	II (EN 60 730-1)
	Safety Class	III (IEC 60536)
	Overvoltage Category	I (EN 60 730-1)
General	Material: Cover, back part Mounting Plate	Fire proof ABS plastic (UL94 class V-0) Aluminum
	Dimension (H x W x D)	Front part: 21 x 88 x 88mm (0.8 x 3.5 x 3.5 in.) Power case: ø 58 x 32 mm (ø 2.3” x 1.3”)
	Weight (including package) TCI-W11 TCI-W22	 205g (7.2 oz.) 220g (7.8 oz)

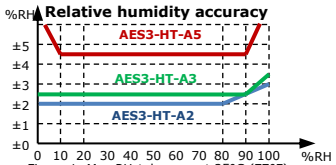

Figure 1: Max RH-tolerance at 25°C (77°F) per sensor type

Product testing and certification

CE Declaration of conformity — Information about the conformity of our products can be found on our website www.vectorcontrols.com on the corresponding product page under "Downloads"

© Vector Controls GmbH, Switzerland

Wiring and Connection

WARNING! Live Electrical Components
During installation, testing, servicing and troubleshooting of Vector Controls products, it may be necessary to work with live electrical components. Have a qualified licensed electrician or other individual who has been properly trained in handling live electrical components perform these tasks. Failure to follow all electrical safety precautions when exposed to live electrical components could result in death or serious injury

TCI-W11

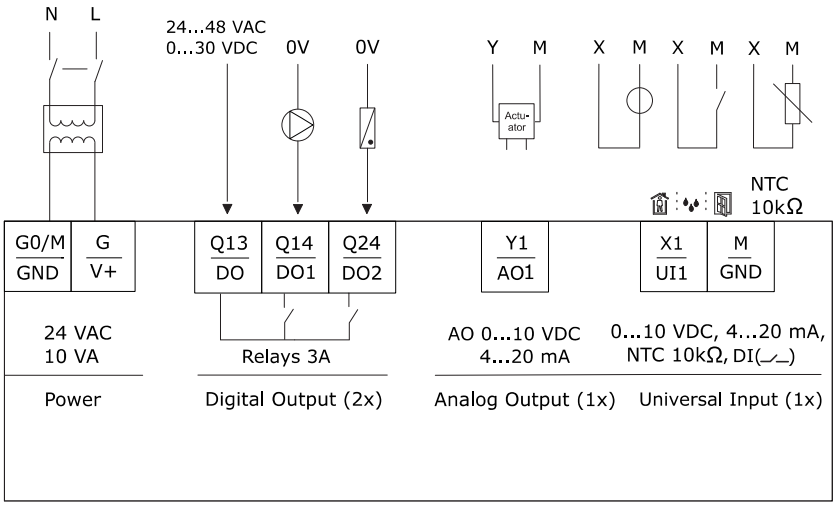

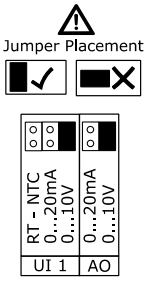

TCI-W22

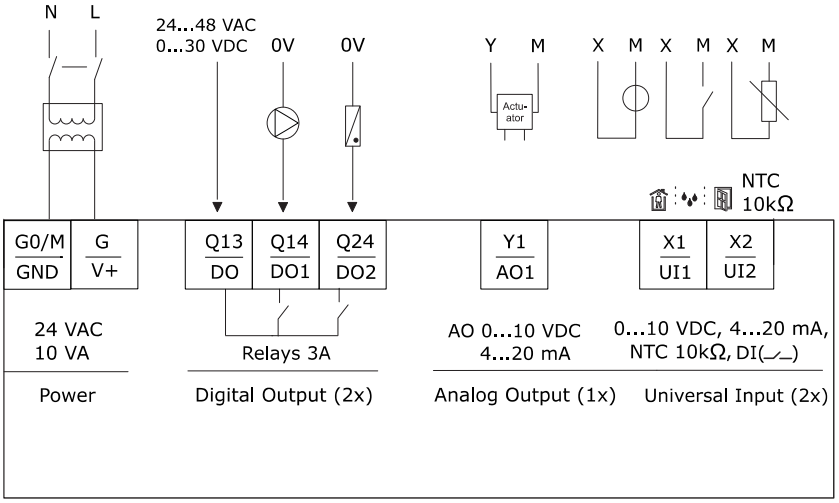

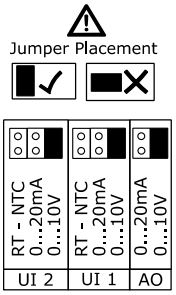

GND	Power supply:	0V, -24VDC; common for power supply, analog in- and outputs
V+	Power supply:	24VAC, +24VDC
DO..	Binary outputs:	Potential free relays contacts (see technical specification)
UI..	Universal input:	NTC 10kΩ @ 25°C (77°F), 0…10 V or 0…20 mA (selectable by jumper)
AO..	Analog output:	0…10 V or 0…20 mA (selectable by jumper)

Use copper, twisted pair, conductors only. The operating voltage must comply with the requirements for safety extra-low voltage (SELV) as per EN 60 730. Use safety insulating transformers class II with double insulation as per EN 60 742; they must be designed for 100% ON-time. When using several transformers in one system, the connection terminal 1 must be galvanic connected. TCI is designed for operation of AC 24 V safety extra-low voltage and is short-circuit-proof. Supplying voltages above AC 24 V to low voltage connections may damage the controller or other devices. Connection to voltages exceeding 42 V endangers personnel safety.

Jumper Settings

See TCI-W installation sheet no. 70-000539 for details (www.vectorcontrols.com).

© Vector Controls GmbH, Switzerland

Dimensions mm (inch)

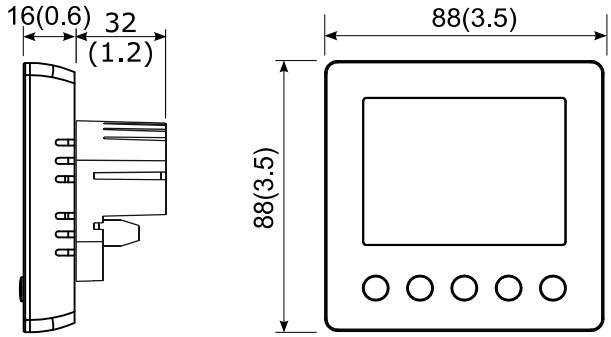

Selection of actuators and sensors

Temperature sensors: Use Vector Controls NTC sensors to achieve maximum accuracy:SDB-Tn10-20 (duct), SRA-Tn10 (room), SDB-Tn10-20 + AMI-S10 as immersion sensor.

Actuators: Choose modulating actuators with an input signal type of 0-10 V DC or 4-20 mA (Min. and max. signal limitations may be set with parameters.3-point actuators with constant running time are recommended.

Binary auxiliary devices (e.g. pumps, fans, on/off valves, humidifiers, etc): Do not directly connect devices that exceed specified limits in technical specifications – observe startup current on inductive loads.

Mounting and installation

Mount the controller on an easily accessible interior wall, approx. 1.5 m (4.5 ft) above the floor, in an area of average temperature. Avoid direct sunlight and other heat sources, locations behind doors, outside walls, air outlets and wet or condensation-prone locations.
Mount and connect the controller as shown in the TCI-W installation sheet no. 70-000539 supplied with the device, and wire it according to the connection diagram above.

© Vector Controls GmbH, Switzerland