# Thermostat for elevator shafts ventilation TOA-T101 and TOA-T102

## Overview



The TOA is an electronic thermostat (temperature monitor) preconfigured for elevator shaft ventilation with for 230 VAC or 24 V AC/DC spring return actuators.

If the measured temperature exceeds the temperature limit, the thermostat switches off its output. If the temperature returns to within the allowed limit, the output is switched back on.

The thermostat can work for heating or cooling applications.

The TOA is delivered with a maximum temperature limit of 35°C (95 °F) and an allowed limit of 30 °C (86 °F)

The thermostat is preconfigured for elevator shaft ventilation but can also be used for heating or cooling applications.

It can be adjusted by the user with the OPA-S operating terminal if required.

### Features

- TOA-T101:
  230 VAC or 24 V AC/DC power supply
  24 V output
- TOA-T102:
  230 VAC power supply
  230 VAC output
- Adjustable switch on and off temperature limits.
  -20…100 °C (-4…212 °F) adjustment range
- 0.5 °C (1 °F) measuring accuracy
- Signal LED indicates operating status of Thermostat
- Temperature can be measured at the device or remotely
- Easy programming of settings with external control unit
- Quick copying of predefined settings using a memory device

### Applications

- Ventilation damper control for elevator shafts.
  Control of damper for temperature control in an elevator shaft by opening or closing the motorized dampers (with spring return). Turning the contact off opens the damper, turning the contact on closes the damper.
- Frost protection
  Activating a heating device if temperature gets close to freezing.

#### Examples

Elevator shaft ventilation with TOA-T101:

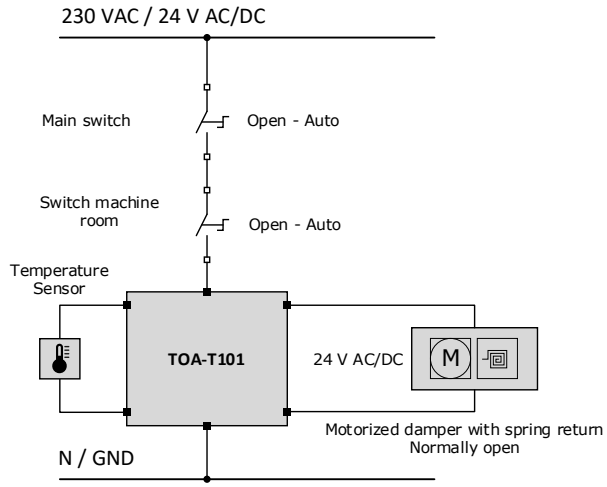


Elevator shaft ventilation with TOA-T102:

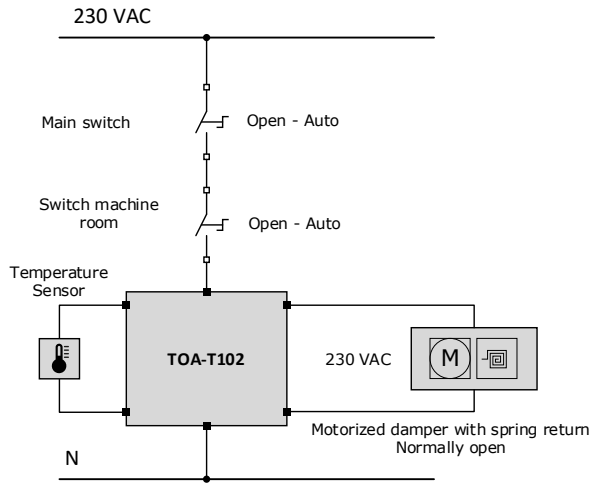


### Product Testing and Certification

CE Declaration of Conformity

Information on the conformity of our products can be found on our website www.vectorcontrols.com on the corresponding product page under "Downloads".


© Vector Controls GmbH, Switzerland
www.vectorcontrols.com

### Types and Ordering

| Product Name | Product No. | Description / Configuration | Option |
|---|---|---|---|
| ***Thermostat*** | | | |
| TOA-T101 | 40-100242 | 230 VAC or 24V AC/DC power supply for 24 V actuators<br>Without temperature sensor | For 24 V actuators without sensor |
| TOA-T101-S5 | 40-100295 | 230 VAC or 24V AC/DC power supply for 24 V actuators<br>Including temperature sensor S-Tn10-005-A | For 24 V actuators with sensor |
| TOA-T102 | 40-100243 | 230 VAC power supply, for 230 VAC actuators<br>Without temperature sensor | For 230 V actuators without sensor |
| TOA-T102-S5 | 40-100296 | 230 VAC power supply for 230 V actuators<br>including temperature sensor S-Tn10-005-A | For 230 V actuators with sensor. |
| ***Temperature sensor if not included must be ordered separately:*** | | | |
| S-Tn10-005-A | 40-200210 | Temperature sensor for measuring at the thermostat | 5 cm, PVC-cable |
| SOD-Tn10-1 | 40-200211 | Temperature sensor for remote mounting | 1 m, PVC-cable |
| ***Accessories*** | | | |
| OPA-S | 40-500006 | External operation terminal with LCD display | |
| AEC-PM2 | 40-500130 | Memory device for easy copying of settings | |

## Technical Specifications

Caution! This device is intended to be used for comfort applications. Where a device failure endangers human life and/or property, it is the responsibility of the owner, designer and installer to add additional safety devices to prevent or detect a system failure caused by such a device failure. Vector Controls or its affiliates cannot be held liable for any damage caused by such a failure. Failure to follow specifications and local regulations may endanger life, cause equipment damage and void warranty.

| | | | |
|---|---|---|---|
| **Power supply** | Input voltage: | TOA-T101: 24 V | 24 VAC, ± 10 %, 50/60 Hz<br>24 VDC, 15…34 VDC<br>Power consumption without Actuator: 2 VA<br>Safety extra low voltage (SELV): HD 384, Class II |
| | | TOA-T101: 230 V<br>TOA-T102 | 230 VAC, ± 10 %, 50/60 Hz |
| | Electrical connection | | Screw terminals, cable 2x 0.34…2.5mm² (AWG 22…14) |
| **Outputs** | Switching logic | | Relay, normally closed |
| | Output voltage: | TOA-T101: 24 V<br>TOA-T101: 230 V | If powered with 24 V AC/DC: 24 V AC/DC<br>If powered with 230 VAC: 24 VAC |
| | | TOA-T102 | 230 VAC |
| | Output power: | TOA-T101: 24 V<br>TOA-T101: 230 V | If powered with 24 V AC/DC: according to power supply<br>If powered with 230 VAC: max 400 VA |
| | | TOA-T102 | Max. 400 VA |
| | Relay output: SPST (NO) | | 2 A Full load current |
| | Insulation strength | | 4000 VAC between relays and system electronics<br>1000 VAC between neighboring contacts |
| | Electrical connection | | Screw terminal, cable 2x 0.34…2.5mm² (AWG 22…14) |
| **Inputs** | Type | | External temperature sensor: Sxx-Tn10 (NTC 10kΩ@25°C) |
| | Range | | -20…100 °C (-4…212 °F) |
| | Accuracy | | 0.5°C at 0…50 °C (32…122 °F)<br>1.0°C at -20…0 °C (-4…32 °F) / 50…100 °C (122…212 °F) |
| **Environment** | Operation<br>Climatic conditions<br>Temperature<br>Humidity | | To IEC 721-3-3<br>Class 3K5<br>0…50 °C (32…122 °F)<br>< 95 % RH non-condensing |
| | Transport & storage<br>Climatic conditions<br>Temperature<br>Humidity<br>Mechanical conditions | | To IEC 721-3-2 and IEC 721-3-1<br>Class 3K3 und class 1K3<br>-25…70 °C (-13…158 °F)<br>< 95 % RH non-condensing<br>Class 2MT2 |


© Vector Controls GmbH, Switzerland
www.vectorcontrols.com

Technical specification (continued)

| | | |
|---|---|---|
| **Standards** | Degree of protection | IP40 (EN 60529) |
| | Overvoltage category | III (EN 60730-1) |
| | Safety class | II (IEC 60536) |
| | Environmental class | II (EN 60730-1) |
| **General** | Material | PC+ABS plastic |
| | Dimensions (L x W x H) | 160 x 75 x 55 mm (6.3 x 3.0 x 2.2 inch) |
| | Weight (including package): TOA-T101 | 465 g (16.40 oz) |
| | TOA-T102 | 305 g (10.76 oz) |

## Dimensions, mm (inch)

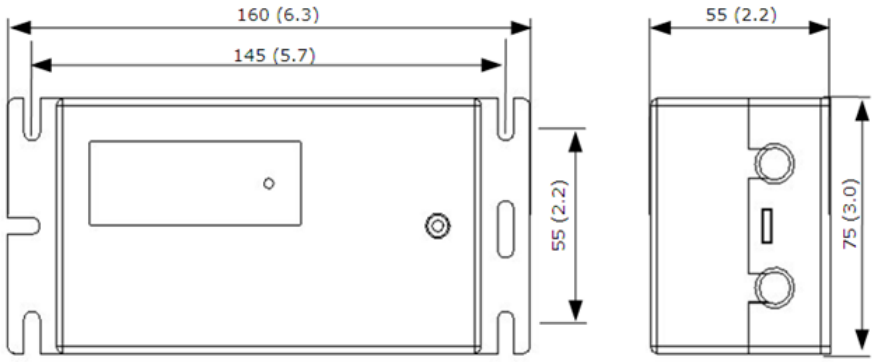


## Wiring and Connection TOA-T101

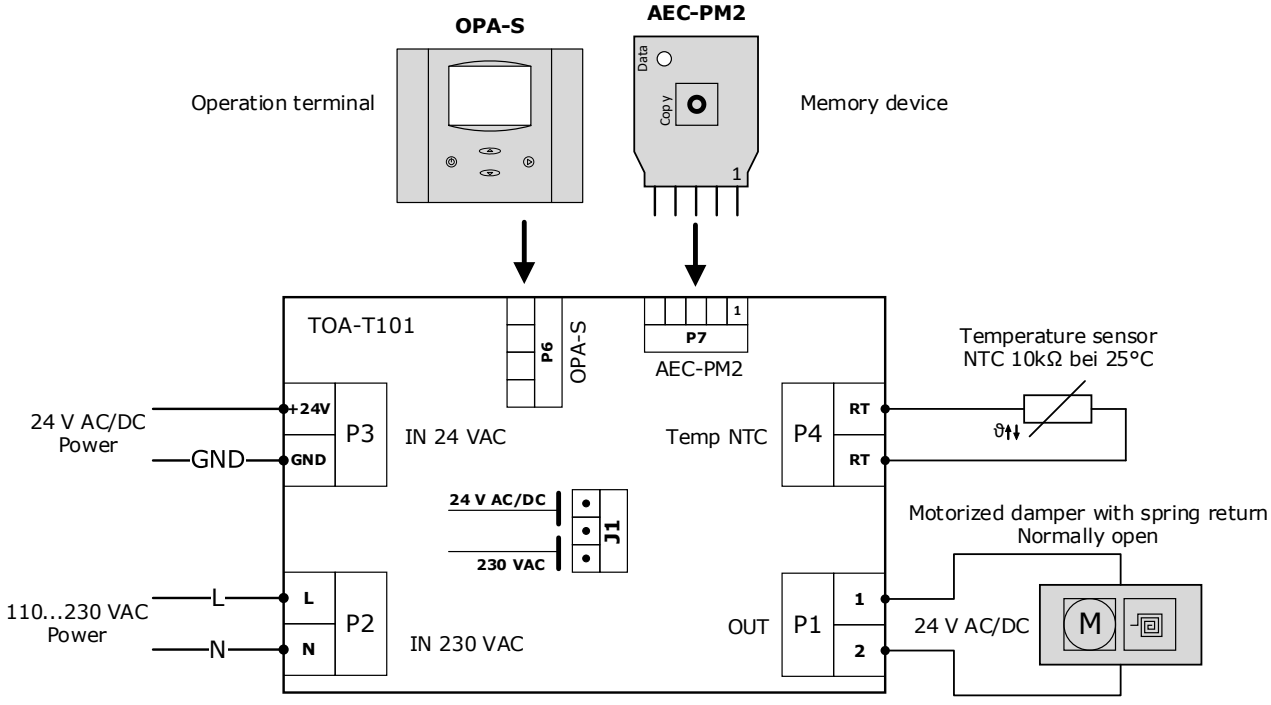


**Important**
The power supply for the TOA-T101 is either 24 V AC/DC or 230 VAC!
The jumper J1 **must** be set according to the supply voltage!


© Vector Controls GmbH, Switzerland
www.vectorcontrols.com

## Wiring and Connection TOA-T102

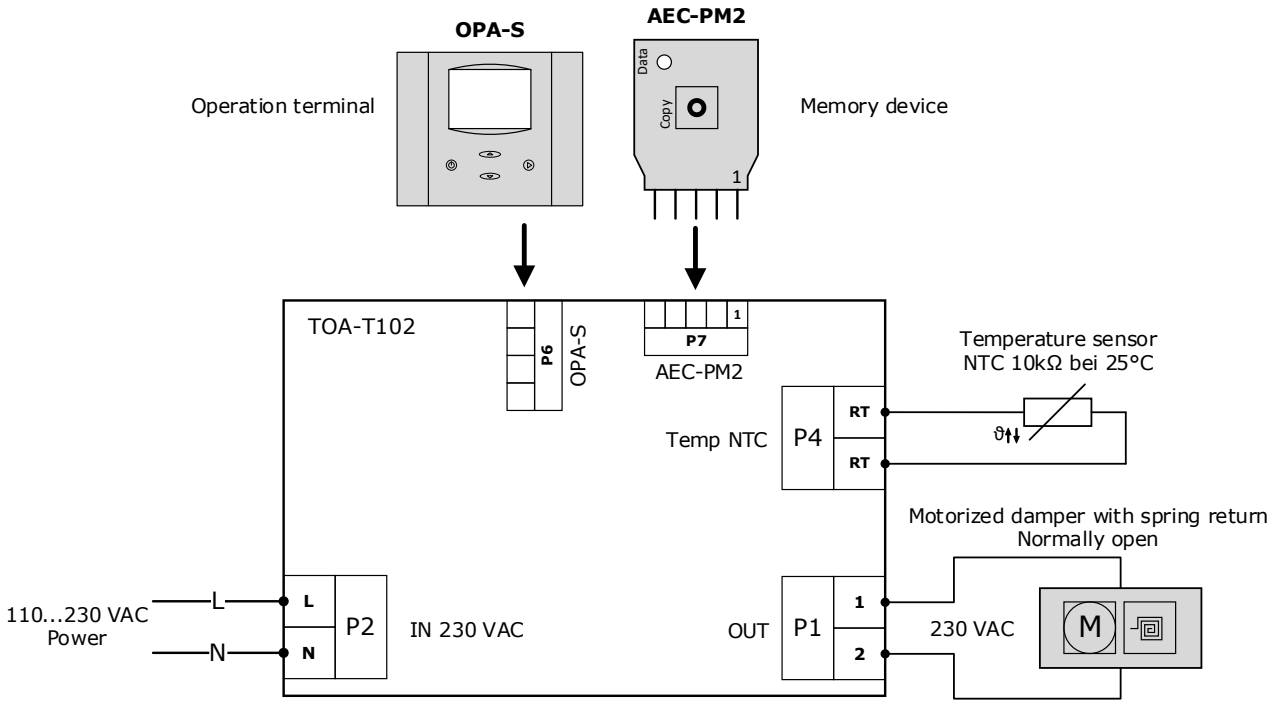


## Temperature sensor selection

Use Vector Controls NTC temperature sensors to achieve maximum monitoring accuracy.
Different cable lengths simplify the installation of the temperature sensor:

- For temperature measurements at the TOA, use the probe with short cable (5 cm).
- For remote temperature measurements, use the probe with long cable (1 m).

For more information, see "Ordering Information" on page 2.

**Important**
The temperature sensor must not be exposed to direct sunlight!

## Mounting and installation

Mount the thermostat in a dry place. Mount and connect it as shown in the installation sheet supplied with the device and wire it according to the wiring diagram above. TOA-T101: set jumper J1 according to the supply voltage.
After power-up the signal LED lights up green. To check the function, disconnect the temperature sensor: the signal LED flashes red and the output switches off. Reconnect the sensor afterwards.


© Vector Controls GmbH, Switzerland
www.vectorcontrols.com

## Display and operation

The device is preconfigured according to the enclosed documentation. Settings such as switching on and switching off temperature limits can be adjusted. The OPA-S operating/programming unit is used for configuration. This can also be used to display the measured values (see section "TOA Configuration").

### Thermostat function

▲ **OFF Limit > ON Limit (standard setting)**

The following diagram shows the temperature-dependent switching behavior of the TOA output voltage for the standard OFF / ON setting of 35 °C / 30 °C (95 °F / 86 °F).

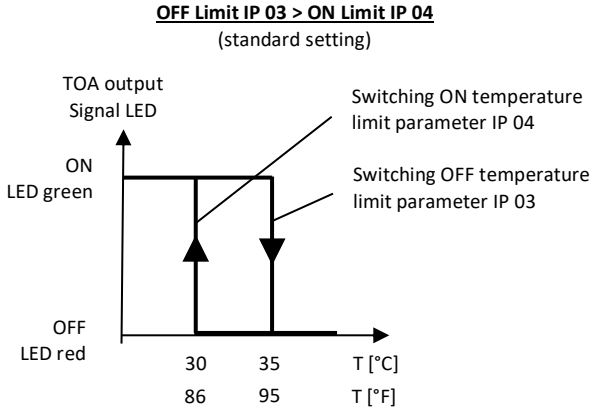


▲ **OFF Limit < ON Limit**

The following diagram shows the temperature-dependent switching behavior of the TOA output voltage for an OFF / ON setting of 20 °C / 25 °C (68 °F / 77 °F).

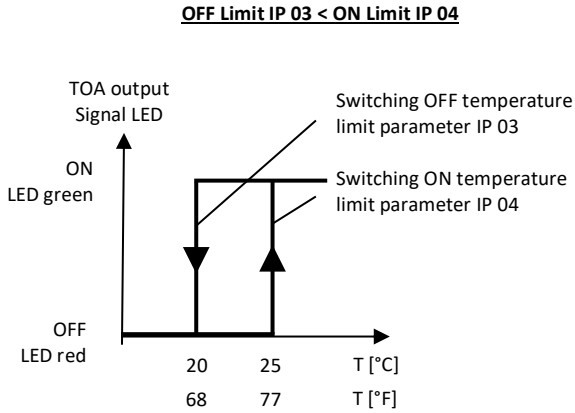


### Signal LED

The signal LED on the top of the housing indicates the operating status of the TOA.

| LED | Status | Description |
|---|---|---|
| red | Output is off | The contact is opened = 0 V |
| green | Output is on | TOA-T101 output voltage = 24 V AC/DC<br>TOA-T102 output voltage = 230 VAC |
| green flashing | Device startup | TOA is starting up. |
| red flashing<br>(2 sec. cycle) | Sensor error | Temperature sensor is not connect or failed. |
| green red<br>repeated flashing | Output error | TOA output overloaded or short circuit at output. |
| dark | No power | Device has no power or is defect |

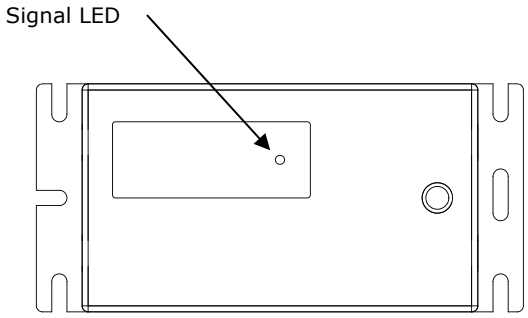



© Vector Controls GmbH, Switzerland
www.vectorcontrols.com

# Additional Information

## Conventions

The following display conventions apply to this document:



**Danger**
Indicates a hazard with a high degree of risk. Failure to observe this warning may result in immediate danger of serious injury or death.



**Important**
Failure to comply with these warnings can result in equipment damage.



**Information**
Further information, important operating instructions, other details.



Reference to another document or other text passages.

## Used abbreviations

| Abbreviation | Meaning |
|---|---|
| NTC | Negative Temperature Coefficient |


© Vector Controls GmbH, Switzerland
www.vectorcontrols.com

Empty Page


© Vector Controls GmbH, Switzerland
www.vectorcontrols.com

# Smart Sensors and Controls Made Easy!

# Quality - Innovation – Partnership

Vector Controls GmbH
Switzerland

info@vectorcontrols.com
www.vectorcontrols.com/


© Vector Controls GmbH, Switzerland
www.vectorcontrols.com