TLR-D42 with OPA-D42

Intelligent PI fan coil controller for modulating actuators.
Cabinet mounted base, wall mounted operation terminal.

Features



- Temperature control for 2-pipe and 4-pipe fan coil systems.
- Relays switching up to 10(6) A
- Three binary outputs for fan speeds.
- Two analog output for modulating 0-10 V actuators
- One binary output for a spring return zone valve, electric heat, gas heat, etc.
- Automatic fan control for three stage fans.
- Control for heating, cooling and fan only operation
- Cost saving option with economy functionality and set point limitation
- Master–Slave option: One terminal capable of driving up to 8 base units in parallel.
- External sensor or potential-free contact for remote control, external heat/cool changeover, or automatic changeover based on supply or outdoor temperature with selectable activation limits.
- Password protected programmable user and control parameters
- Temperature display in Celsius or Fahrenheit

Deluxe Version:

- Clock and time schedule functions with special options for schools and universities
- Clock keeps running for 48h in case of power failure
- Display with blue backlight
- Infrared remote control option:
  With special features for boost and delayed switching on or off

Applications

3 or 1 speed air handler units or fan coils, cooling and/or heating, for 2-pipe or 4-pipe systems with one or two modulating valves; and/or one ON/OFF control (electrical heat, gas heat, hot water spring return valve, etc).
VAV units with heat and cool air supply (auto change-over), fan powered option; local heating coil (electrical, hot water coil, etc.)

General description

The TLR-D42 is a stand-alone electronic single loop controller with a fan control option and one PI heating and cooling sequence. The controller includes 1 NTC room temperature sensor, 3 + 1 relays outputs and two analog outputs. A detailed adaptation to local conditions is possible with the use of a simple configuration routine. The TLR-D42 can be configured using the standard operation terminal. No special tools or software are required.
The TLR-D42 has been specifically developed to switch larger fans with switching power of up to 10 (6) A.

Ordering

A working controller consists of one operation terminal and at least one base unit.

Item name	Item code	Function	Type	Key-data
TLR-D42-24	40-11 0085	24 VAC	Base unit	Fan coil controller with: 1 TI int or ext 3 DO (Relay) Fan control 1 DO (Relay) Binary control 2 AO 0…10 VDC
TLR-D42-230	40-11 0086	230 VAC		
OPA-D42	40-10 0168	Standard	Operation Terminal	
OPA-D42-D	40-10 0169	Deluxe		

Accessories

OPR-1	40-50 0001	2xAAA bat	Infrared remote control
S-Tn10-2	40-20 0001	Flying lead sensor with 2 m cable	
SD-Tn10-12-2	40-20 0002	Flying lead duct sensor 12 cm immersion depth, 2 m cable	
SD-Tn10-20-2	40-20 0003	Flying lead duct sensor 20 cm immersion depth, 2 m cable	
SDB-Tn10-12	40-20 0051	Duct sensor with housing, 12 cm immersion depth	
SDB-Tn10-20	40-20 0004	Duct sensor with housing, 20 cm immersion depth	
SRA-Tn10	40-20 0005	Room sensor	
SOD-Tn10	40-20 0059	Outdoor sensor	

© Vector Controls GmbH, Switzerland

Technical specifications

Caution! This device is intended to be used for comfort applications. Where a device failure endangers human life and/or property, it is the responsibility of the owner, designer and installer to add additional safety devices to prevent or detect a system failure caused by such a device failure. Vector Controls or its affiliates cannot be held liable for any damage caused by such a failure. Failure to follow specifications and local regulations may endanger life, cause equipment damage and void warranty.

Power Supply	Operating voltage	TLR-D42-24	24 VAC ± 10 %, 50/60 Hz, SELV to HD 384, Class II transformer, 48VA max
		TLR-D42-230	230 VAC ± 10 %, 50/60 Hz
	Power consumption	TLR-D42-24	Max. 3 VA
		TLR-D42-230	Max. 5 VA
	Electrical connection	Terminal Connectors	Wire 0.34…2.5 mm² (AWG 23…13)
	Deluxe type only. Power backup for real time clock		Min 48 h if charged for 24 h
Signal inputs	Temperature input	Range	0…50 °C (32…122 °F)
		Accuracy	0.5 °C, 1 °F
Signal outputs	Digital switching outputs		DO1 to DO3, DO4
	Switching Type		Relays
	AC Switching power		0…240 VAC 10(6) A max. each output
	Insulation strength		
	between relays contacts and system electronics:		3750 VAC to EN 60730-1
	between neighboring relays contacts		1250 VAC to EN 60730-1 1<>2<>3
	between relay groups:		3750 VAC to EN 60730-1 1/2/3<>4
	Analog outputs		AO1, AO2
	Output signal		DC 0…10 V
	Maximum load		1 mA
Communication Base - Terminal	Communication type		Digital: peer to peer
	Cabletype:		Copper wire 0.8…2.5 mm² (AWG18…AWG13), shielded twisted pair
Environment	Operation		To IEC 721-3-3
	Climatic conditions		class 3K5
	Temperature		0…50 °C (32…122 °F)
	Humidity		< 95% RH, non-condensing
	Transport &storage		To IEC 721-3-2 and IEC 721-3-1
	Climatic conditions		class 3K3 and class 1K3
	Temperature		-25…70 °C (-13…158 °F)
	Humidity		< 95% RH, non-condensing
	Mechanical conditions		class 2M2
Standards	CE conformity		
	EMC Directive		2004/108/EC
	Low voltage directive		2006/95/EC
	Product standards		
	Automatic electrical controls for household and similar use		EN 60730-
	Special requirement on temperature dependent controls		EN 60730-2-9
	Electromagnetic compatibility for domestic sector		Emissions: EN 60730-1 Immunity: EN 60730-1
General terminal	Safety class		III (IEC 60536)
	Degree of protection		IP30 to EN 60529
	Material	Cover, back part	ABS plastic (UL94 class V-0)
		Mounting plate	Galvanized steel
	Color		White RAL 9003
	Dimensions (H x W x D)		88 x 88 x 24 mm (3.5 x 3.5 x 0.9 in)
	Weight including package	OPA-D42	180 g (6.3 oz)
		OPA-D42-D	190 g (6.7 oz)
General base	Safety class		II (IEC 60536)
	Degree of protection		IP20 to EN 60529
	Housing material		PC+ABS plastic (UL94 class V-0)
	Color		Gray (RAL 7001 / 7035)
	Dimensions (H x W x D)		57 x 147 x 115 mm (2.25 x 5.8 x 4.5 in)
	Weight including package	TLR-D42-24	345 g (12.2 oz)
		TLR-D42-230	445 g (15.7 oz)

© Vector Controls GmbH, Switzerland

Dimensions [mm] (inch)

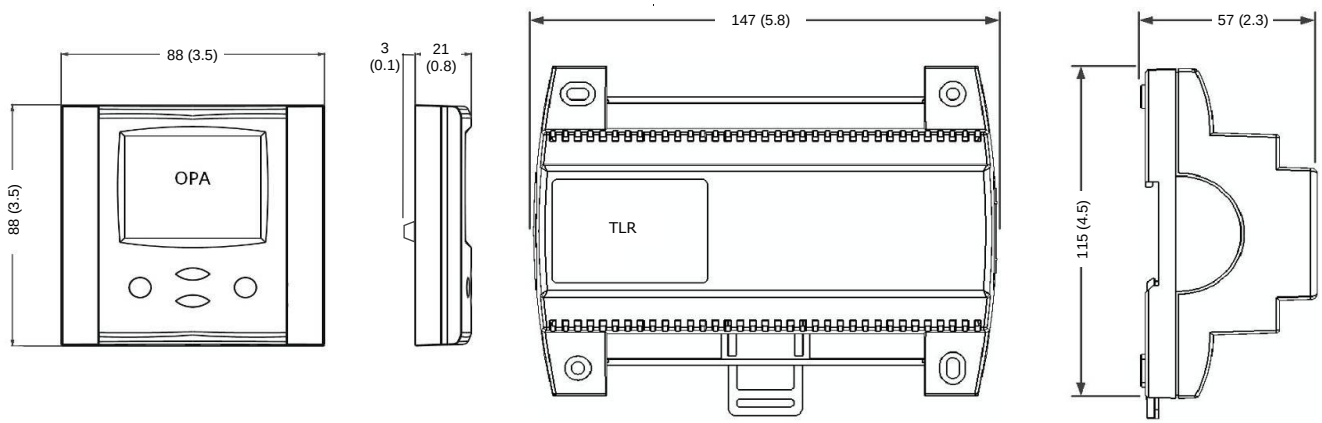

© Vector Controls GmbH, Switzerland

Wiring diagram

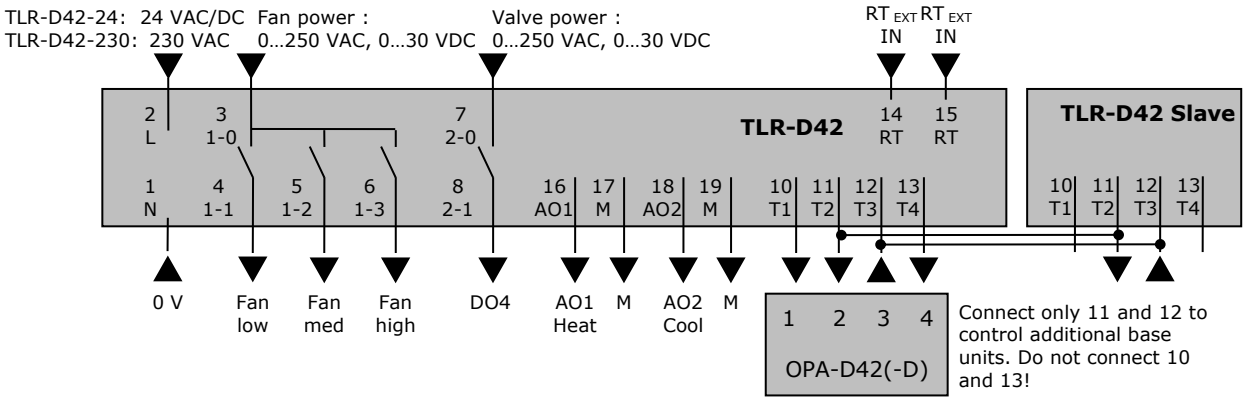

Description:

1	**N**	Power supply:	TLR-D42-24:	0 VAC, 24 VDC,	TLR-D42-230:	0 VAC
2	**L**	Power supply:	TLR-D42-24:	24 VAC, 24 VDC,	TLR-D42-230:	230 VAC
3	**1-0**	Switched common for fan:	0…250 VAC, 0…30 VDC			
4	**1-1**	Binary output:	Fan speed low			
5	**1-2**	Binary output:	Fan speed medium			
6	**1-3**	Binary output:	Fan speed high			
7	**2-0**	Switched common for valve:	0…250 VAC, 0…30 VDC			
8	**2-1**	Binary output:	Spring return valve			
10	**Term1**	Terminal connection 1	Connect to operation terminal			
11	**Term2**	Terminal connection 2	Connect to operation terminal			
12	**Term3**	Terminal connection 3	Connect to operation terminal			
13	**Term4**	Terminal connection 4	Connect to operation terminal			
14	**RT**	External temperature input:	Sxx-Tn10 or open contact			
15	**RT**	External temperature input:	Sxx-Tn10 or open contact			
16	**AO1**	Analog output	Proportional heating output 0…10 VDC			
17	**M**	Signal ground	Signal ground for proportional output			
18	**AO2**	Analog output	Proportional cooling output 0…10 VDC			
19	**M**	Signal ground	Signal ground for proportional output			

Installation base

The housing of the TLR base unit is a robust plastic enclosure. The controller may be mounted in any orientation by surface mounting on a wall or in a cabinet. 4 mounting-holes for screws up to 4 mm diameter are provided. Mounting onto a standard 35 mm DIN rail is also possible.
When mounting note the following:

- The controller should not be freely accessible after mounting. A protective housing should be used, if mounted outside an electrical cabinet.
- ***Ensure adequate air circulation to dissipate heat generated during operation***.
- Local installation regulations must be observed.

Installation Terminal

1. Install the mounting plate straight to the wall or the flush mounting box. Make sure that the nipple with the front holding screw is facing down. Make sure the screw heads do not stand out more than 5 mm of the surface of the mounting plate.
2. Connect the wires of the terminals to the communication wires according wiring diagram
3. Slide the two latches located on the top of the front part into the hooks of the mounting plate.
4. Lower the front part until located flat on the wall and the mounting plate is not visible anymore. Make sure the connection cable does not get in the way.
5. Tighten the front holding screw to secure the front part to the mounting plate.

Connection base to terminal

- Max. Distance: 200 m (565 ft.)
- Twisted pair copper wires may be used for wiring in an EMC-safe environment. In an impaired EMC environment use only shielded cables. The operating voltage must comply with the requirements for safety extra-low voltage (SELV) as per EN 60730.
- 1 terminal may drive up to 8 base units. Total wire distance must not exceed 200 m.
- Conductor resistance will influence external temperature reading. 450 Ω will result in an increase of 1 °C (2 °F). Compensate using UP-08 if external temperature is used to control unit.

Selection of actuators and sensors

Temperature sensors: Use only approved NTC sensors to achieve optimal accuracy. See chapter ordering for details.

Binary auxiliary devices: E.g. fans and on/off valves. Do not directly connect devices that exceed maximum switching currents as detailed under technical specifications. Observe startup current of fans.
Modulating actuators: Choose actuators with an input signal type of 0…10 VDC. Observe maximum load as detailed under technical specifications.

© Vector Controls GmbH, Switzerland

Display and operation

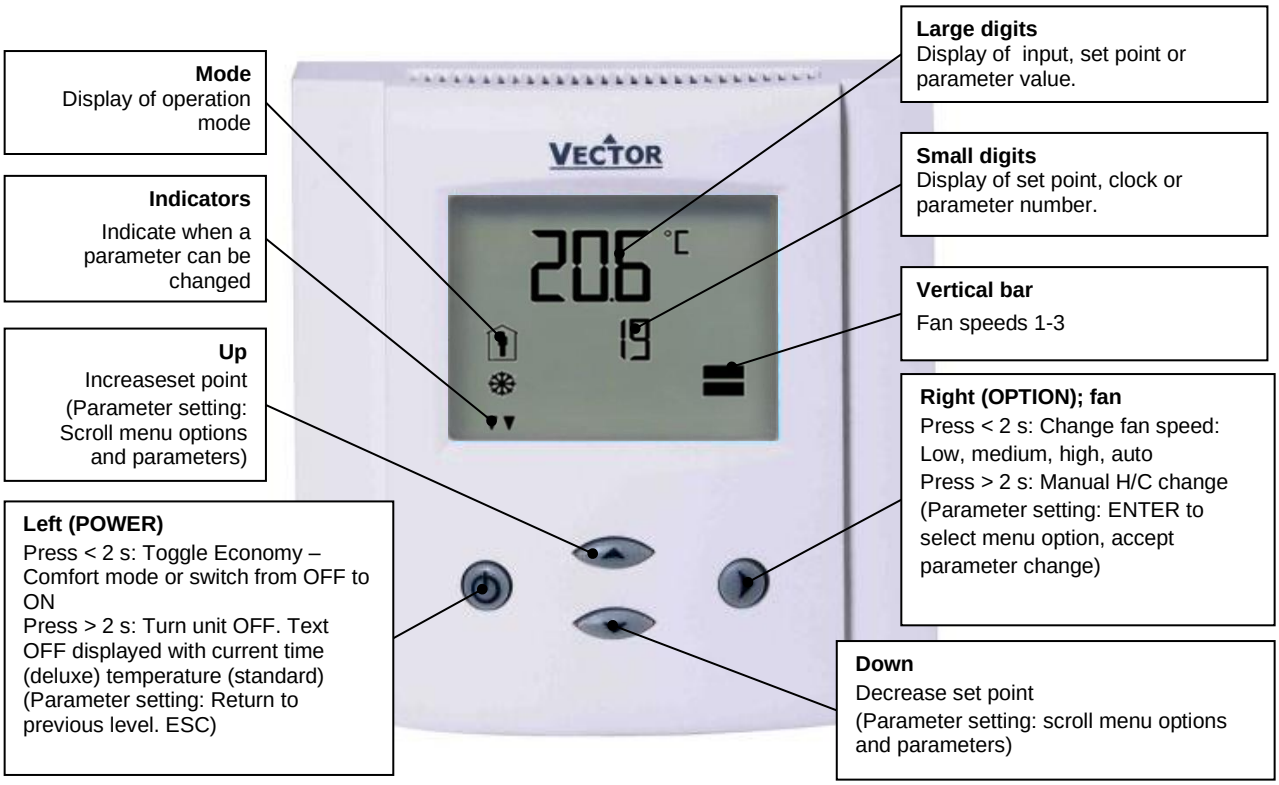

Operation modes and symbols

	Comfort (occupied)	All control functions operating per set points.
	Economy (unoccupied):	Set points shifted according to *Parameters FC04.* Economy mode and set point shift may be disabled with UP06
OFF	Energy Hold Off	Outputs are off, inputs monitored for alarm condition
	Heating	Output activates if temperature lower than set point
	Cooling	Output activates if temperature higher than set point
	Fan	Fan is running, the vertical bars show active speed 1…3
	Manual	Manual override of fan speed, fan only mode or override of time schedule
	Time schedule	A time schedule is active

Display of set point instead of current temperature

By default, the current room temperature is shown in the large digits. To display only the set point, set user parameter UP10 = 1. The measured temperature will then no longer be visible."

Power failure

All the parameters and set points are memorized and do not need to be reentered. Depending on **UP05** the unit will remain switched off, switch on automatically or return to the operation mode it was in before the power failure.
Deluxe version only: Timer operation and daytime setting will be retained for 24 h. The controller has to be connected to a power supply for at least 10 hours for the backup function to operate accordingly.

Frost protection

The controller will enter frost protection mode if the room temperature drops below 5 °C (41 °F). All heating outputs will be fully opened. Frost protection mode will be left once the temperature reaches 10 °C (50 °F). Frost protection display will remain until a button is pressed. Frost protection can be enabled/disabled using parameter UP-09.

Error messages

Err1: Temperature sensor faulty. The temperature sensor is damaged.
Err2: External input for heat / cool auto change over missing or damaged.
FP: Steady: Frost protection is active.
Blinking: Frost protection activated in the past and is now inactive. Confirm with OPTION key.

Status LED

The status LED is located on the TLR-D42 base unit between the two low power terminal connector groups. The status LED may display the following feedback:
No light: No power or unit is damaged
Blink every 1 s: Error, terminal – base unit do not match or signal is not clear.
Blink every 2 s: Normal communication, base unit detected
Blink every 5 s: Base unit operates normal, no terminal detected

© Vector Controls GmbH, Switzerland

Manual heat/cool/ fan only change

To manually change heating / cooling / fan only mode press the OPTION key for more than 2 seconds. Access to manual heat – cool and/or fan only mode may be disabled by parameter UP03.

For standard models: Press OPTION > 2 s SEL and H-C is displayed. For deluxe models: Press OPTION > 2 s SEL and current time is displayed. Press UP key twice. SEL and H-C is displayed. Press OPTION again to toggle heating, cooling and fan only modes.	SEL H-C

Clock operation

The deluxe model contains a quartz clock with battery back-up. Up to 4 time schedules with 4 mode changes each based on time and day of the week may be programmed. A blinking clock indicates that the time has not been set or that the unit was without power for longer than 48 hours. The time needs to be set to allow time schedules to operate.

Clock setup

Press OPTION > 2 s SEL and current time displayed Press OPTION< 2 s to change time, Minutes blink: UP/DOWN to change, OPTION to save, Hours blink: UP/DOWN to change, OPTION to save, Press OPTION to save time, DAY1 blinks: UP/DOWN to change, OPTION to save	SEL 00:00 DAY1 (Mon)

Creating time schedules

Step 1: Selection and enabling of time schedules

Press OPTION > 2 s SEL and current time displayed Press UP: SEL and PRO displayed, clock symbol blinks Press OPTION: PRO1 shows with 1 blinking. UP/DOWN select time schedule group Press OPTION OFF/ ON blinks, UP/DOWN to change, OPTION to save	SEL PRO	Pro1-Pro4 OFF/ON

Step 2: Select weekdays

This time schedule will be active during the selected weekdays Press UP/DOWNto step through available options: d1-7, d1-6, d1-5, d6-7, day1, day2, day3, day4, day5, day6, day7 Day 1 stands for Monday, day 2 for Tuesday and so forth Press OPTION to save day selection	Pro1 d1-7

Step 3: Selected action of first switching event

One bar on the right side indicates the first switching event Press UP/DOWN to select action for first switching event: No = switching eventnot active OFF = switches unit off, Reset (UP17) active if switched to ON manually. Eco = sets operation mode to On and Economy (Not occupied), reset (UP17) active if set to comfort manually On = sets operation mode to On and Comfort (Occupied) Uni = University mode, Reset (UP17) not active if manually activated Press OPTION to select switching time of first event	Pr01 no

Step 4: Selected time of first switching event

Press UP/DOWN to select switching time: Select switching time 00:00 to 23:45 in 15-minute steps Press OPTION to complete and select action of second switching event	Pr01 08:00

Step 5: Select actions and time of switching event 2 - 4

Repeat Step 3 and Step 4 for the remaining switching events. If a switching event is not needed, set it to "no" The bars on the right side indicate number of switching event After completing the 4th switching event, the process returns to the selection of the time schedule on step 1.	Pr01 08:00

- ➔ UNI: University mode: This mode is used for rooms such as lecture rooms and auditoriums that might be occupied during a certain time. During this time the reset is not active. The unit will not start itself when UNI mode is active. It still needs to be manually activated. This is to avoid unnecessary heating or cooling of such rooms while they are not occupied.
- ➔ A blinking clock indicates that the time needs to be set. Time programs will not operate if the time is not defined. See chapter operation, advanced settings for instructions on how to set the time.
- ➔ Access to time schedules may be disabled with UP-04

© Vector Controls GmbH, Switzerland

Operation with OPR-1

The deluxe version may be alternatively operated with an infrared remote control.

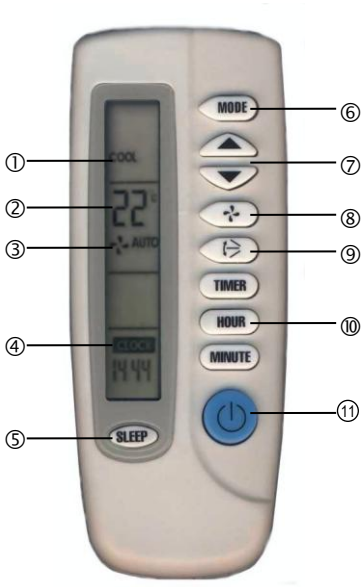

1. Mode indication, Auto, Dry, Cool, Fan, Heat
2. 2-digit display of set point
3. Fan indication
4. 4-digit display of current time or delayed switching time
5. Economy button: Toggles economy/comfort mode
6. Mode button, changes operation modes
7. UP/DOWN Button: Set point adjustment buttons
8. FAN Button: Changes fan speed, low – medium – high or Auto
9. Not used
10. Time related buttons: Timer, Hour, Minute
11. POWER button: Operation mode ON – OFF

Switching ON

The unit is switched on by pressing the POWER button. It will start up in comfort mode.

Changing between COMFORT and ECONOMY

Pressing the Economy button toggles between ECONOMY and COMFORT modes.

Switching OFF

Pressing the POWER while the unit is on, will switch the unit off. The current time will be displayed in the LCD of OPR-1.

Changing of set points

Only the set points for the temperature loop may be changed. Set point range is 15 to 30 °C.

Changing of fan speeds

Repeatedly pressing the fan speed button steps through low, medium, high and automatic fan speeds. Automatic fan speed will not be activated in FAN ONLY mode.

Clock settings

The remote controller contains a daytime clock. In order to set the clock, press HOUR and MINUTE button together until the clock starts blinking. Then set the correct time with the HOUR and MINUTE buttons. Confirm by pressing the TIMER button. The clock of the OPR will set the clock of the controller.

Delayed switching

The unit may be delayed switched on or off using the timer button. Pressing the timer button once will display Timer ON if currently in OFF mode or TIMER OFF if currently in ON mode. Set the time when the unit is supposed to switch on or off using the HOUR and MINUTE buttons.

Mode changes

Repeatedly pressing the mode button may activate the following operation modes: HEAT, COOL and FAN ONLY. The mode change may be disabled using the UP parameters.

Note:
The remote control is currently only available in °C mode.

© Vector Controls GmbH, Switzerland

Smart Sensors and Controls
Made Easy!

Quality - Innovation – Partnership

Vector Controls GmbH
Switzerland

info@vectorcontrols.com
www.vectorcontrols.com/

© Vector Controls GmbH, Switzerland