TLR-D5P with OPU-D5P, Heat pump & package unit controller
Cabinet mounted base, wall mounted operation terminal

Features



- Temperature control for 2-pipe or 4-pipe package units or heat pumps (fan supported dual heating or cooling stages with reversing valve)
- Temperature control for 2-pipe package units or heat pumps (fan supported dual heating or cooling stages) with optional electric re-heat
- Temperature control for 4-pipe package units (fan supported heating and cooling 1. stage + optional 2 stage heating or cooling)
- Relays switching up to 10(6) A
- Control for heating, cooling and fan only operation
- Adjustable start and stop delays to protect compressors and switching elements
- Cost saving option with economy functionality and set point limitations
- For large rooms: Master – Slave option: One terminal may drive up to 8 base units in parallel
- External sensor or potential-free contact for remote control, external heat/cool changeover, or automatic changeover based on supply or outdoor temperature with selectable activation limits
- Password protected programmable user and control parameters
- Temperature display in Fahrenheit

Deluxe Version:

- Clock and time schedule functions with special options for schools and universities
- Clock keeps running for 48 h in case of power failure
- Display with blue backlight
- Infrared remote controller option:
  With special features for Boost and delayed switching on or off

Applications

- Air only systems: fan supported heating and/or cooling stages e.g. compressors, electric heaters.
- Air/water systems: Induction units, fan supported dual coil units for 2- and 4-pipe systems.

General description

The TLR-D5P is a stand-alone electronic package unit controller with one control loop. The TLR-D5P includes one internal NTC temperature sensor, one open/contact or external NTC temperature input and five binary outputs (relays).
A detailed adaptation to local conditions is possible with the use of a simple configuration routine. The TLR-D5P can be configured using the standard operation terminal. No special tools or software is required.
The TLR-D5P has been specifically developed to switch larger loads with switching power of up to 10(6) A for each binary output.

Ordering

A working controller consists of one operation terminal and at least one base unit.

Item name	Item code	Function	Type	Key-data
TLR-D5P-24	40-11 0013	24 VAC	Base unit	Fan coil controller with:
OPU-D5P	40-10 0095	Standard	Operation terminal	1 TI int or ext. 1 DO (Relay) Fan control 4 DO (Relay) Binary control
OPU-D5P-D	40-10 0096	Deluxe		

Parameter preset

-W01	40-10 00xx-01	Cooling only	Add –Wx at the end of the item name or –x at the end of item code to order pre-configured model

Accessories

OPR-1	40-50 0001	2xAAA bat	Infrared remote controller
S-Tn10-2	40-20 0001	Flying lead sensor with 6 ft. (2 m) cable
SD-Tn10-12-2	40-20 0002	Flying lead duct sensor 4.7” (12 cm) immersion depth, 6 ft. (2 m) cable
SD-Tn10-20-2	40-20 0003	Flying lead duct sensor 7.8” (20 cm) immersion depth, 6 ft. (2 m) cable
SDB-Tn10-12	40-20 0051	Duct sensor with housing, 4.7” (12 cm) immersion depth
SDB-Tn10-20	40-20 0004	Duct sensor with housing, 7.8” (20 cm) immersion depth
SRA-Tn10	40-20 0005	Room sensor
SOD-Tn10	40-20 0059	Outdoor sensor

© Vector Controls LLC, USA
www.vectorcontrols.com

Technical specifications

Caution! This device is intended to be used for comfort applications. Where a device failure endangers human life and/or property, it is the responsibility of the owner, designer and installer to add additional safety devices to prevent or detect a system failure caused by such a device failure. Vector Controls or its affiliates cannot be held liable for any damage caused by such a failure. Failure to follow specifications and local regulations may endanger life, cause equipment damage and void warranty.

Power supply	Operating voltage	TLR-D5P-24	24V AC/DC ± 10 %, 50/60 Hz, SELV to HD 384, Class II, 48 VA max
	Power consumption	TLR-D5P-24	Max. 3 VA
	Electrical connection	Terminal connectors	Wire 0.34…2.5 mm^2 (AWG 22…13)
	Deluxe type only: Power backup for real time clock		Min 48 h if charged for 24 h
Signal inputs	Temperature input	Range Accuracy	0…50 °C (32…122 °F) 0.5 °C, 1 °F
Signal outputs	Digital switching outputs Switching type AC Switching power Insulation strength between relays contacts and system electronics: between neighboring relays contacts between relay groups:		DO1 to DO5 Relays 0…240 VAC 10(6) A max. each output 3750 VAC to EN 60730-1 1250 VAC to EN 60730-1 1<>2<>3, 4<>5 3750 VAC to EN 60730-1 1/2/3<>4/5
Communication Base - Terminal	Communication type Cable type:		Digital: peer to peer Copper wire 0.8…2.5 mm^2 (AWG18…13), shielded twisted pair
Environment	Operation Climatic conditions Temperature Humidity		To IEC 721-3-3 class 3K5 0…50 °C (32…122 °F) < 95% RH non-condensing
	Transport & storage Climatic conditions Temperature Humidity Mechanical conditions		To IEC 721-3-2 and IEC 721-3-1 class 3K3 and class 1K3 -25…70 °C (-13…158 °F) < 95% RH non-condensing class 2M2
Standards	CE conformity EMC directive Low voltage directive		 2004/108/EC 2006/95/EC
	Product standards Automatic electrical controls for household and similar use Special requirement on temperature dependent controls		 EN 60730-1 EN 60730-2-9
	Electromagnetic compatibility for domestic sector		Emissions: EN 60730-1 Immunity: EN 60730-1
General terminal	Safety class		III (IEC 60536)
	Degree of protection		IP30 to EN 60529
	Material	Cover, back part Mounting plate	ABS plastic (UL94 class V-0) Galvanized steel
	Color		White RAL 9003
	Dimensions (H x W x D)		112 x 73 x 18 mm (4.4 x 2.9 x 0.8 in)
	Weight including package	OPU-D5P OPU-D5P-D	180 g (6.3 oz) 190 g (6.7 oz)
General base	Safety class		II (IEC 60536)
	Degree of protection		IP20 to EN 60529
	Housing material		PC+ABS plastic (UL94 class V-0)
	Color		Gray (RAL 7001 / 7035)
	Dimensions (H x W x D)		57 x 147 x 115 mm (2.25 x 5.8 x 4.5 in)
	Weight including package	TLR-D5P-24	345 g (12.2 oz)

© Vector Controls LLC, USA
www.vectorcontrols.com

Dimensions [mm] (inch)

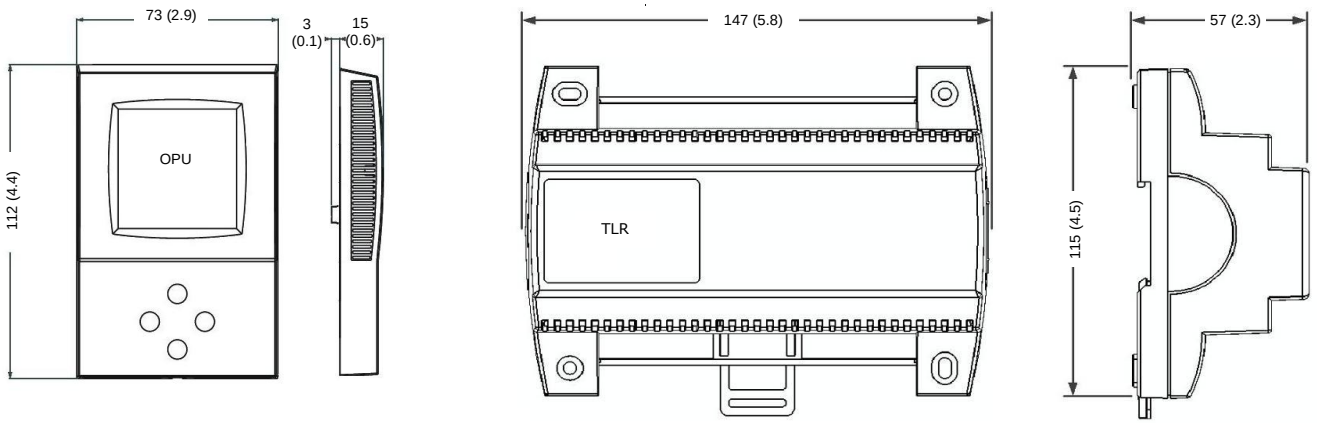

Schematics

Power supply

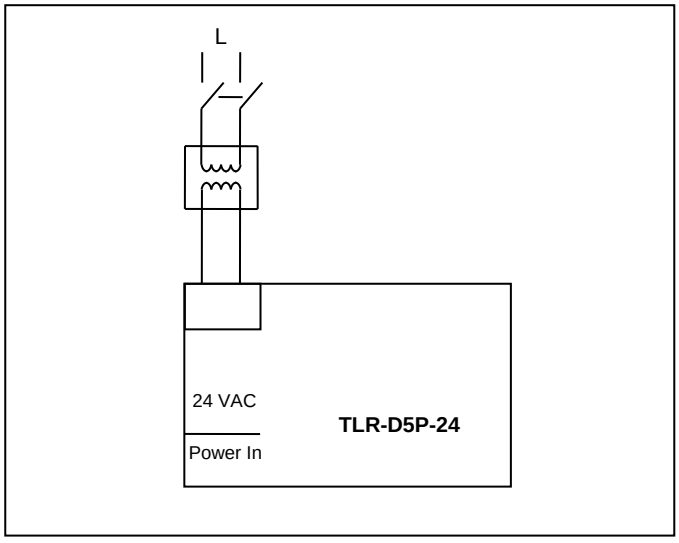

Inputs and operation terminal

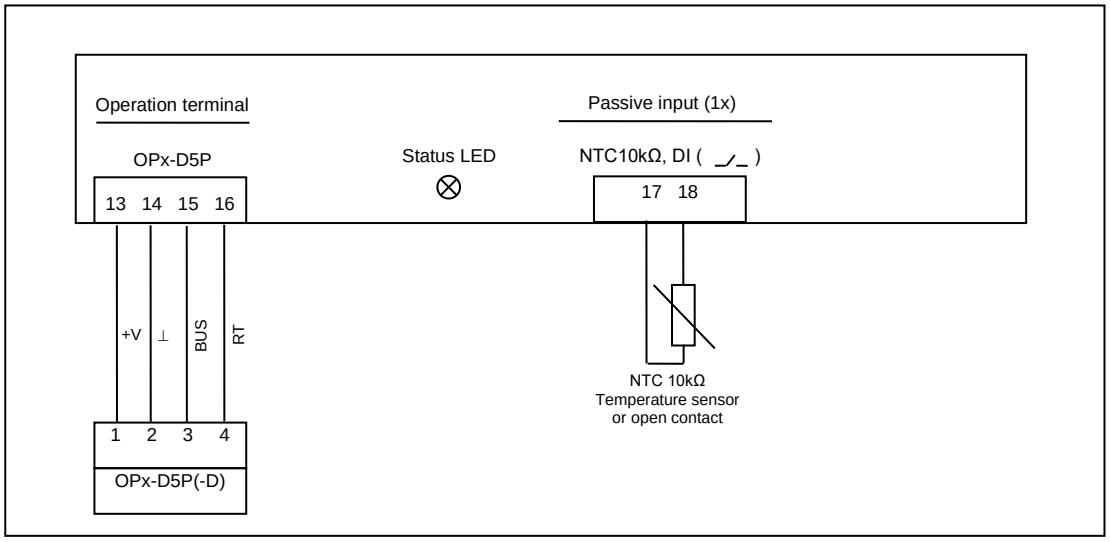

© Vector Controls LLC, USA
www.vectorcontrols.com

Outputs

CP11 = 0, Cooling only

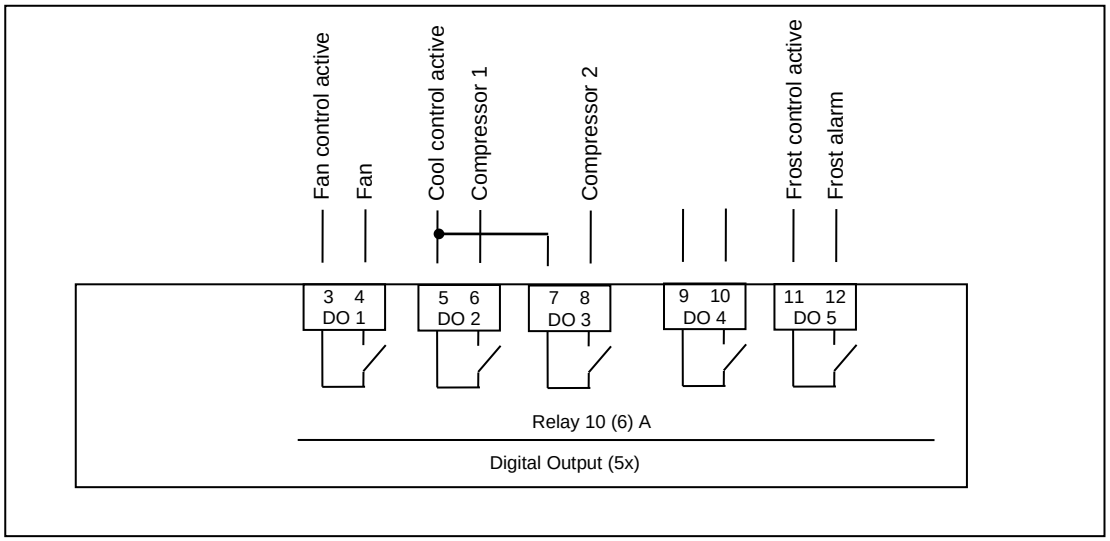

CP11 = 1, Heating only

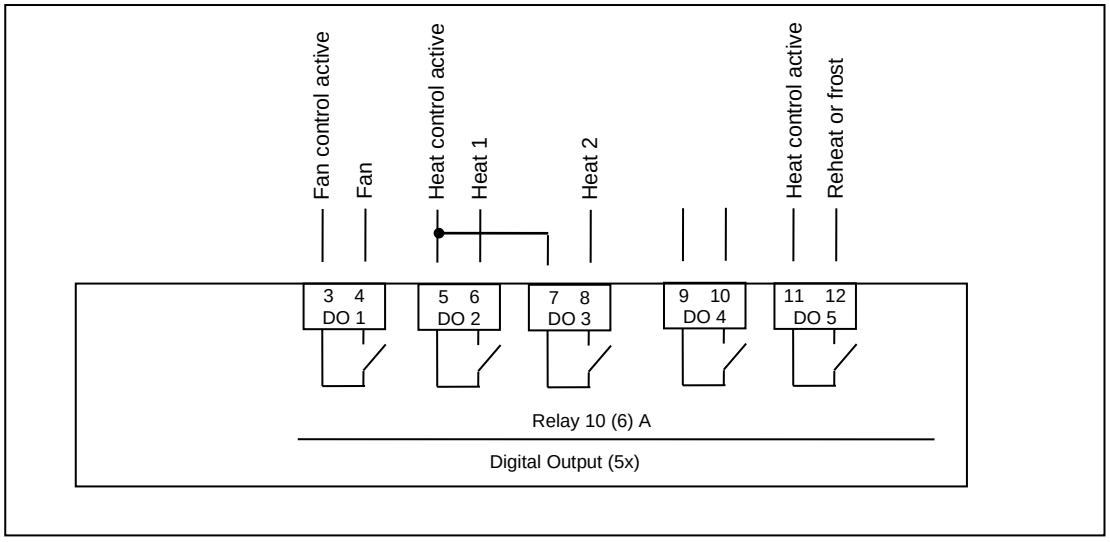

© Vector Controls LLC, USA
www.vectorcontrols.com

CP11 = 2, 2-pipe

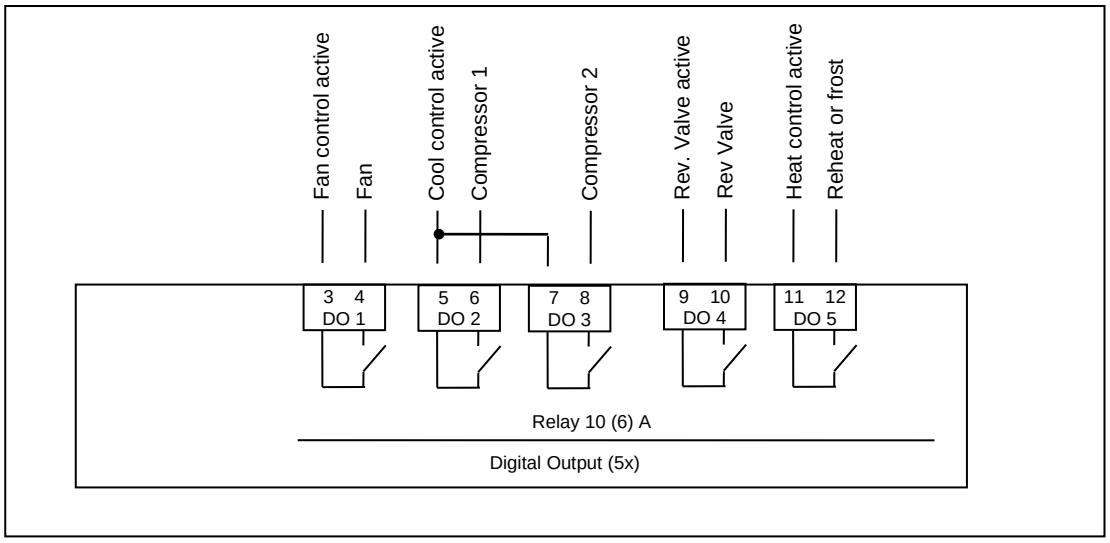

© Vector Controls LLC, USA
www.vectorcontrols.com

CP11 = 3, 4-pipe

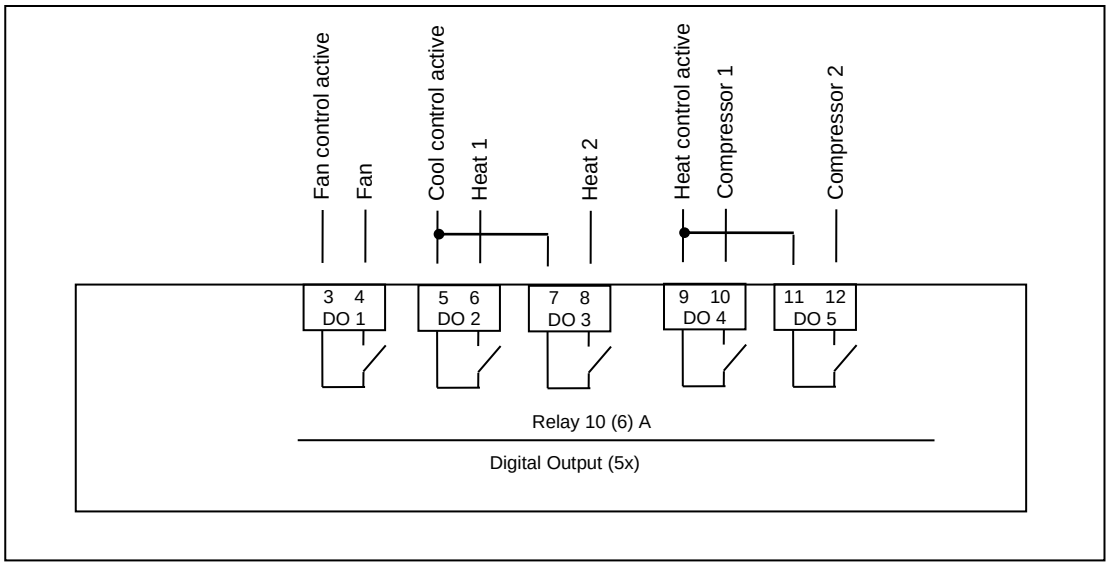

Wiring Diagram

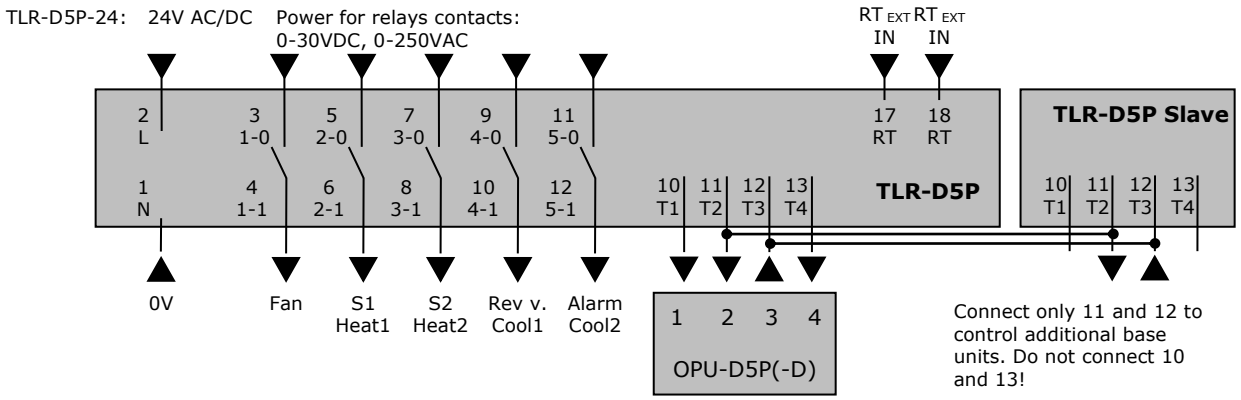

Description:

1	**N**	Power supply:	TLR-D5P-24: 0V AC, 0V DC	
2	**L**	Power supply:	TLR-D5P-24: 24V AC, 24V DC	
3	**1-0**	Switched common for fan:	0-250VAC, 0-30VDC	
4	**1-1**	Binary output:	Fan	
5	**1-2**	Binary output:	2-pipe: Stage 1 heat/cool,	4-pipe: Heating stage 1
6	**1-3**	Binary output:	2-pipe: Stage 2 heat/cool,	4-pipe: Heating stage 2
7	**2-0**	Switched common for valve:	0-250VAC, 0-30VDC	
8	**2-1**	Binary output:	2-pipe: Reversing valve	4-pipe: Cooling stage 1
9	**2-2**	Binary output:	2-pipe: Alarm	4-pipe: Cooling stage 2
10	**Term1**	Terminal connection 1	Connect to operation terminal	
11	**Term2**	Terminal connection 2	Connect to operation terminal	
12	**Term3**	Terminal connection 3	Connect to operation terminal	
13	**Term4**	Terminal connection 4	Connect to operation terminal	
14	**RT**	External temperature input:	Sxx-Tn10 or open contact	
15	**RT**	External temperature input:	Sxx-Tn10 or open contact	

© Vector Controls LLC, USA
www.vectorcontrols.com

Installation base

The housing of the TLR base unit is a robust plastic enclosure. The controller may be mounted in any orientation by surface mounting on a wall or in a cabinet. 4 mounting-holes for screws up to 4 mm diameter are provided. Mounting onto a standard 35 mm DIN rail is also possible.
When mounting note the following:

- The controller should not be freely accessible after mounting. A protective housing should be used, if mounted outside an electrical cabinet.
- ***Ensure adequate air circulation to dissipate heat generated during operation***.
- Local installation regulations must be observed.

Installation terminal

1. Install the mounting plate straight to the wall or the flush mounting box. Make sure that the nipple with the front holding screw is facing down. Make sure the screw heads do not stand out more than 5 mm of the surface of the mounting plate.
2. Connect the wires of the terminals to the communication wires according wiring diagram
3. Slide the two latches located on the top of the front part into the hooks of the mounting plate.
4. Lower the front part until located flat on the wall and the mounting plate is not visible anymore. Make sure the connection cable does not get into the way.
5. Tighten the front holding screw to secure the front part to the mounting plate.

Connection base to terminal

- Max. Distance: 200 m (565 ft.)
- Twisted pair copper wires may be used for wiring in an EMC-safe environment. In an impaired EMC environment use only shielded cables. The operating voltage must comply with the requirements for safety extra-low voltage (SELV) as per EN 60730.
- 1 terminal may drive up to 8 base units. See wiring for parallel connections. Total wire distance should not exceed 200 m.
- Conductor resistance will influence external temperature reading. 450 Ω will result in an increase of 1 °C (2 °F). Compensate using UP-08 if external temperature is used to control unit.

Selection of actuators and sensors

Temperature sensors: Use only approved NTC sensors to achieve maximum accuracy. See ordering for details.

Binary auxiliary devices: E.g. fans and on/off valves. Do not directly connect devices that exceed maximum switching currents as detailed under technical specifications. Observe startup current of fans.

© Vector Controls LLC, USA
www.vectorcontrols.com

Smart Sensors and Controls Made Easy!

Quality - Innovation – Partnership

Vector Controls LLC
USA

infous@vectorcontrols.com
www.vectorcontrols.com

© Vector Controls LLC, USA
www.vectorcontrols.com