TLR-D42 with OPA-D42

Intelligent PI fan coil controller for modulating actuators.
Cabinet mounted base, wall mounted operation terminal.

Features



- Temperature control for 2-pipe and 4-pipe fan coil systems.
- Relays switching up to 10(6) A
- Three binary outputs for fan speeds.
- Two analog output for modulating 0-10 V actuators
- One binary output for a spring return zone valve, electric heat, gas heat, etc.
- Automatic fan control for three stage fans.
- Control for heating, cooling and fan only operation
- Cost saving option with economy functionality and set point limitation
- Master–Slave option: One terminal capable of driving up to 8 base units in parallel.
- External sensor or potential-free contact for remote control, external heat/cool changeover, or automatic changeover based on supply or outdoor temperature with selectable activation limits.
- Password protected programmable user and control parameters
- Temperature display in Celsius or Fahrenheit

Deluxe Version:

- Clock and time schedule functions with special options for schools and universities
- Clock keeps running for 48h in case of power failure
- Display with blue backlight
- Infrared remote control option:
  With special features for boost and delayed switching on or off

Applications

3 or 1 speed air handler units or fan coils, cooling and/or heating, for 2-pipe or 4-pipe systems with one or two modulating valves; and/or one ON/OFF control (electrical heat, gas heat, hot water spring return valve, etc).
VAV units with heat and cool air supply (auto change-over), fan powered option; local heating coil (electrical, hot water coil, etc.)

General description

The TLR-D42 is a stand-alone electronic single loop controller with a fan control option and one PI heating and cooling sequence. The controller includes 1 NTC room temperature sensor, 3 + 1 relays outputs and two analog outputs. A detailed adaptation to local conditions is possible with the use of a simple configuration routine. The TLR-D42 can be configured using the standard operation terminal. No special tools or software are required.
The TLR-D42 has been specifically developed to switch larger fans with switching power of up to 10 (6) A.

Ordering

A working controller consists of one operation terminal and at least one base unit.

Item name	Item code	Function	Type	Key-data
TLR-D42-24	40-11 0085	24 VAC	Base unit	Fan coil controller with: 1 TI int or ext 3 DO (Relay) Fan control 1 DO (Relay) Binary control 2 AO 0…10 VDC
TLR-D42-230	40-11 0086	230 VAC		
OPA-D42	40-10 0168	Standard	Operation Terminal	
OPA-D42-D	40-10 0169	Deluxe		

Accessories

OPR-1	40-50 0001	2xAAA bat	Infrared remote control
S-Tn10-2	40-20 0001	Flying lead sensor with 2 m cable	
SD-Tn10-12-2	40-20 0002	Flying lead duct sensor 12 cm immersion depth, 2 m cable	
SD-Tn10-20-2	40-20 0003	Flying lead duct sensor 20 cm immersion depth, 2 m cable	
SDB-Tn10-12	40-20 0051	Duct sensor with housing, 12 cm immersion depth	
SDB-Tn10-20	40-20 0004	Duct sensor with housing, 20 cm immersion depth	
SRA-Tn10	40-20 0005	Room sensor	
SOD-Tn10	40-20 0059	Outdoor sensor	

© Vector Controls GmbH, Switzerland

Technical specifications

Caution! This device is intended to be used for comfort applications. Where a device failure endangers human life and/or property, it is the responsibility of the owner, designer and installer to add additional safety devices to prevent or detect a system failure caused by such a device failure. Vector Controls or its affiliates cannot be held liable for any damage caused by such a failure. Failure to follow specifications and local regulations may endanger life, cause equipment damage and void warranty.

Power Supply	Operating voltage	TLR-D42-24	24 VAC ± 10 %, 50/60 Hz, SELV to HD 384, Class II transformer, 48VA max
		TLR-D42-230	230 VAC ± 10 %, 50/60 Hz
	Power consumption	TLR-D42-24	Max. 3 VA
		TLR-D42-230	Max. 5 VA
	Electrical connection	Terminal Connectors	Wire 0.34…2.5 mm² (AWG 23…13)
	Deluxe type only. Power backup for real time clock		Min 48 h if charged for 24 h
Signal inputs	Temperature input	Range	0…50 °C (32…122 °F)
		Accuracy	0.5 °C, 1 °F
Signal outputs	Digital switching outputs		DO1 to DO3, DO4
	Switching Type		Relays
	AC Switching power		0…240 VAC 10(6) A max. each output
	Insulation strength		
	between relays contacts and system electronics:		3750 VAC to EN 60730-1
	between neighboring relays contacts		1250 VAC to EN 60730-1 1<>2<>3
	between relay groups:		3750 VAC to EN 60730-1 1/2/3<>4
	Analog outputs		AO1, AO2
	Output signal		DC 0…10 V
	Maximum load		1 mA
Communication Base - Terminal	Communication type		Digital: peer to peer
	Cabletype:		Copper wire 0.8…2.5 mm² (AWG18…AWG13), shielded twisted pair
Environment	Operation		To IEC 721-3-3
	Climatic conditions		class 3K5
	Temperature		0…50 °C (32…122 °F)
	Humidity		< 95% RH, non-condensing
	Transport &storage		To IEC 721-3-2 and IEC 721-3-1
	Climatic conditions		class 3K3 and class 1K3
	Temperature		-25…70 °C (-13…158 °F)
	Humidity		< 95% RH, non-condensing
	Mechanical conditions		class 2M2
Standards	CE conformity		
	EMC Directive		2004/108/EC
	Low voltage directive		2006/95/EC
	Product standards		
	Automatic electrical controls for household and similar use		EN 60730-
	Special requirement on temperature dependent controls		EN 60730-2-9
	Electromagnetic compatibility for domestic sector		Emissions: EN 60730-1 Immunity: EN 60730-1
General terminal	Safety class		III (IEC 60536)
	Degree of protection		IP30 to EN 60529
	Material	Cover, back part	ABS plastic (UL94 class V-0)
		Mounting plate	Galvanized steel
	Color		White RAL 9003
	Dimensions (H x W x D)		88 x 88 x 24 mm (3.5 x 3.5 x 0.9 in)
	Weight including package	OPA-D42	180 g (6.3 oz)
		OPA-D42-D	190 g (6.7 oz)
General base	Safety class		II (IEC 60536)
	Degree of protection		IP20 to EN 60529
	Housing material		PC+ABS plastic (UL94 class V-0)
	Color		Gray (RAL 7001 / 7035)
	Dimensions (H x W x D)		57 x 147 x 115 mm (2.25 x 5.8 x 4.5 in)
	Weight including package	TLR-D42-24	345 g (12.2 oz)
		TLR-D42-230	445 g (15.7 oz)

© Vector Controls GmbH, Switzerland

Dimensions [mm] (inch)

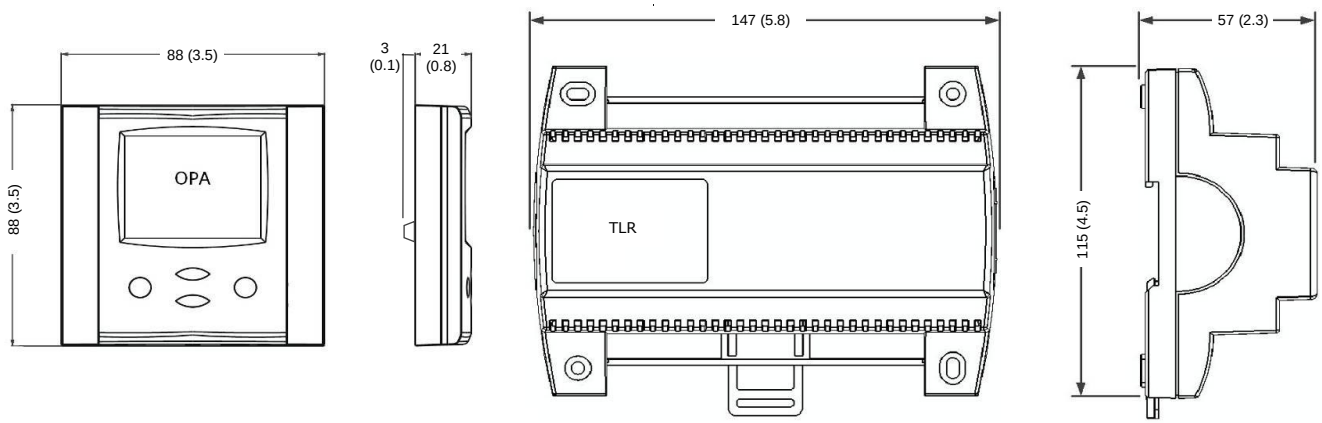

© Vector Controls GmbH, Switzerland

Wiring diagram

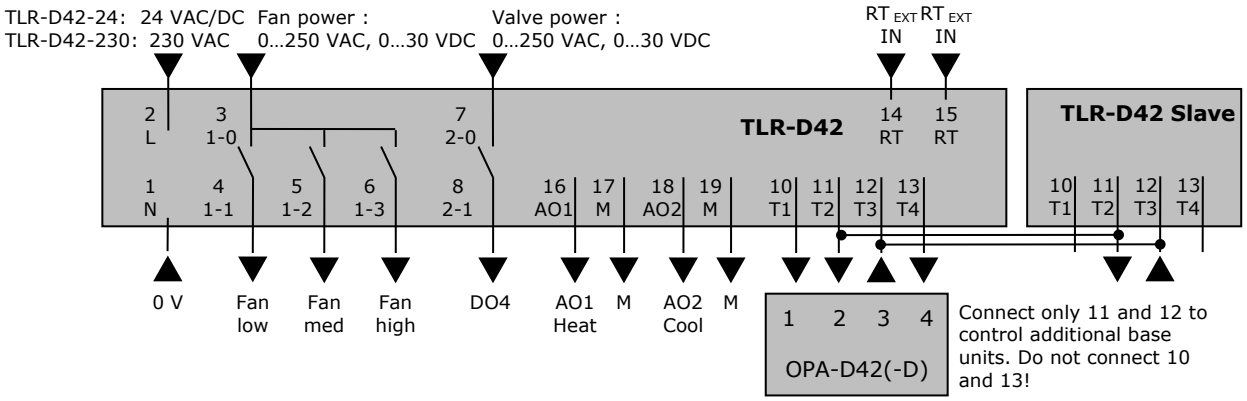

Description:

1	**N**	Power supply:	TLR-D42-24:	0 VAC, 24 VDC,	TLR-D42-230:	0 VAC
2	**L**	Power supply:	TLR-D42-24:	24 VAC, 24 VDC,	TLR-D42-230:	230 VAC
3	**1-0**	Switched common for fan:	0…250 VAC, 0…30 VDC			
4	**1-1**	Binary output:	Fan speed low			
5	**1-2**	Binary output:	Fan speed medium			
6	**1-3**	Binary output:	Fan speed high			
7	**2-0**	Switched common for valve:	0…250 VAC, 0…30 VDC			
8	**2-1**	Binary output:	Spring return valve			
10	**Term1**	Terminal connection 1	Connect to operation terminal			
11	**Term2**	Terminal connection 2	Connect to operation terminal			
12	**Term3**	Terminal connection 3	Connect to operation terminal			
13	**Term4**	Terminal connection 4	Connect to operation terminal			
14	**RT**	External temperature input:	Sxx-Tn10 or open contact			
15	**RT**	External temperature input:	Sxx-Tn10 or open contact			
16	**AO1**	Analog output	Proportional heating output 0…10 VDC			
17	**M**	Signal ground	Signal ground for proportional output			
18	**AO2**	Analog output	Proportional cooling output 0…10 VDC			
19	**M**	Signal ground	Signal ground for proportional output			

Installation base

The housing of the TLR base unit is a robust plastic enclosure. The controller may be mounted in any orientation by surface mounting on a wall or in a cabinet. 4 mounting-holes for screws up to 4 mm diameter are provided. Mounting onto a standard 35 mm DIN rail is also possible.
When mounting note the following:

- The controller should not be freely accessible after mounting. A protective housing should be used, if mounted outside an electrical cabinet.
- ***Ensure adequate air circulation to dissipate heat generated during operation***.
- Local installation regulations must be observed.

Installation Terminal

1. Install the mounting plate straight to the wall or the flush mounting box. Make sure that the nipple with the front holding screw is facing down. Make sure the screw heads do not stand out more than 5 mm of the surface of the mounting plate.
2. Connect the wires of the terminals to the communication wires according wiring diagram
3. Slide the two latches located on the top of the front part into the hooks of the mounting plate.
4. Lower the front part until located flat on the wall and the mounting plate is not visible anymore. Make sure the connection cable does not get in the way.
5. Tighten the front holding screw to secure the front part to the mounting plate.

Connection base to terminal

- Max. Distance: 200 m (565 ft.)
- Twisted pair copper wires may be used for wiring in an EMC-safe environment. In an impaired EMC environment use only shielded cables. The operating voltage must comply with the requirements for safety extra-low voltage (SELV) as per EN 60730.
- 1 terminal may drive up to 8 base units. Total wire distance must not exceed 200 m.
- Conductor resistance will influence external temperature reading. 450 Ω will result in an increase of 1 °C (2 °F). Compensate using UP-08 if external temperature is used to control unit.

Selection of actuators and sensors

Temperature sensors: Use only approved NTC sensors to achieve optimal accuracy. See chapter ordering for details.

Binary auxiliary devices: E.g. fans and on/off valves. Do not directly connect devices that exceed maximum switching currents as detailed under technical specifications. Observe startup current of fans.
Modulating actuators: Choose actuators with an input signal type of 0…10 VDC. Observe maximum load as detailed under technical specifications.

© Vector Controls GmbH, Switzerland