TLC3-FCM-R2 -U
Programmable PI Fan Coil controller

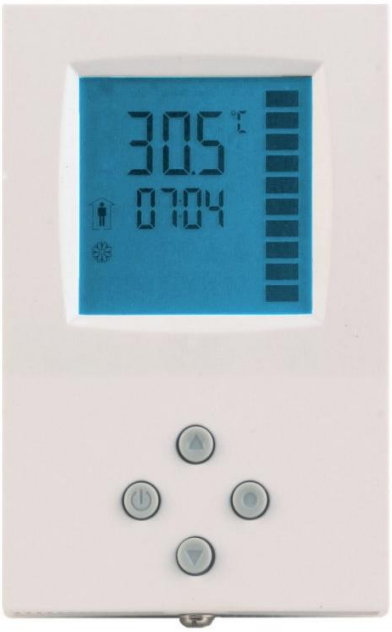

Features

- Proven PI controls algorithm reduces room temperature fluctuations and energy consumption
- Low power energy consumption: < 0.5 W per unit
- Temperature control for 2- and 4-pipe fan coil systems.
- Automatic fan control for EC fans.
- Cost saving option with Economy functionality and set point limitations
- Control for modulating heating, cooling and fan only operation modes
- Password protected programmable user and control parameters
    - Setpoint range limitation
    - Access control for setpoints, fan speeds and mode change
    - Access control for heat/cool change and time programs
    - Select your display contents
    - Selectable behavior after return from power failure
- Temperature display in Celsius or Fahrenheit

Deluxe Version:

- Clock and time schedule functions with power failure protection
- Blue backlight for LCD
- Infrared remote controller option:
  With special features for Boost and delayed switching on or off

Applications

- Air Only Systems:
    - Constant or Variable Air Volume systems with three stage fans for single or dual duct systems
- Air/Water Systems:
    - Fan Coil units for 2-pipe or 4-pipe systems
    - radiator control, chilled ceiling
- Simple individual room control for hotel rooms, meeting rooms, etc.
- PI-Control of up to 2 modulating valves for heating and cooling

General Description

The **TLC3-FCM-R2-T** is a stand-alone electronic fan coil controller with one control loop. The TLC3-FCM-R2-T is designed for EC fan coil systems and features 1 internal NTC temperature sensor, one external passive input for temperature or open contact, two binary outputs (Relays) and one analog output (0-10VDC) for fan control.

The **TLC3-FCM2-R2** is a stand-alone electronic fan coil controller with one control loop. The TLC3-FCM2-R2 is designed for EC fan coil systems and features 1 internal NTC temperature sensor, two binary outputs and two analog outputs (0-10VDC) one for fan control and one for a heating or cooling valve.

A detailed parameterization is possible with the use of a simple configuration routine. The TLC3-FCM-R2 can be configured using the standard operation terminal. No special tools or software is required.

Ordering

Item Name	Item code	Variant	Power	Features
TLC3-FCM-R2-T-U-230	40-100277	Standard	230VAC	Fan coil controller (US Edition) with: 1 TI int 1 external input (NTC) 2 DO (Relay) 1 AO (0-10VDC)

Selection of sensors

Use only our approved NTC sensors to achieve maximum accuracy. Recommended is SDBTn10-15 as Duct sensor, SRA-Tn10 as Room sensor and SDB-Tn10-15+AMI-10 as immersion sensor.

Selection of fans

Do not directly connect devices that exceed 2A. Observe startup current on inductive loads! Do not connect more than one fan coil unit to one controller.

Modulating Actuators:

Choose actuators with an input signal type of 0-10V DC or 2-10V DC. Observe maximal signal current of 1mA!

© Vector Controls LLC, USA

Technical Specification

Caution! This device is intended to be used for comfort applications. Where a device failure endangers human life and/or property, it is the responsibility of the owner, designer and installer to add additional safety devices to prevent or detect a system failure caused by such a device failure. Vector Controls or its affiliates cannot be held liable for any damage caused by such a failure. Failure to follow specifications and local regulations may endanger life, cause equipment damage and void warranty.

Power Supply	Operating Voltage	210–250 VAC
	Power Consumption	Max 1W, 1.5 VA
	Electrical Connection	Terminal Connectors
	Deluxe type only: Power backup for real time clock	Min 48h if charged for 24h
Signal Inputs	Temperature Inputs Range Accuracy	RT Internal, External (Sxx-Tn10 sensor) 0…50 °C (32…122 °F) 0.5°C (1°F)
Signal Outputs	Digital Switching Outputs Switching Type AC Switching power Insulation strength between relays contacts and system electronics: between neighboring relays contacts	DO1, DO2 Relays 2A max. each output 3750V AC to EN 60 730-1 1250V AC to EN 60 730-1
	Analog Outputs Output Signal Resolution Minimum impedance	AO1, For TLC3-FCM2-R2 AO2 DC 0…10 V 9.76 mV (10 bit) 10kOhm, 1mA.
Environment	Operation Climatic Conditions Temperature Humidity	To IEC 721-3-3 class 3 K5 0°C …50°C (32°F…122°F) <95% R.H. non-condensing
	Transport & Storage Climatic Conditions Temperature Humidity Mechanical Conditions	To IEC 721-3-2 and IEC 721-3-1 class 3 K3 and class 1 K3 -25°C…70°C (-13°F…158°F) <95% R.H. non-condensing class 2M2
Standards	CE conformity EMC Directive Low Voltage Directive	 2004/108/EC 2006/95/EC
	Product standards Automatic electrical controls for household and similar use Special requirement on temperature dependent controls	 EN 60 730 –1 EN 60 730 – 2 - 9
	Electromagnetic compatibility for domestic sector	Emissions: EN 60 730-1 Immunity: EN 60 730-1
	Degree of Protection	IP30 to EN 60 529
	Pollution Class	II (EN 60 730-1)
	Safety Class:	II (IEC 60 536)
	Overvoltage Category:	III (EN 60 730-1)
General	Dimensions (H x W x D) Front part: Power case:	112 x 73 x 32mm (4.4 x 2.9 x 1.3 in) 60 x 50 x 32mm (2.4 x 2.0 x 1.3 in)
	Material: Cover, back part Mounting Plate	ABS plastic (UL94 class V-0) Aluminum
	Weight (including package)	Standard: 245g (8.6oz), Deluxe: 255g (9.0oz)

© Vector Controls LLC, USA

Dimensions

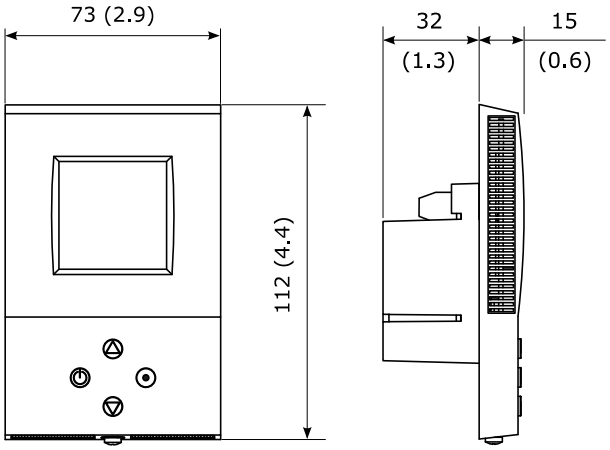

Space required in flush mounting box:
(H x W x D)
60 x 50 x 32 mm (2.4 x 2.0 x 1.3 in)

Distance for mounting screws:
Horizontal 57 to 61 mm (2.25 to 2.63 in)
Vertical 70 to 92 mm (2.75 to 3.62 in)

Wiring Diagram

TLC3-FCM2-R2-U-230

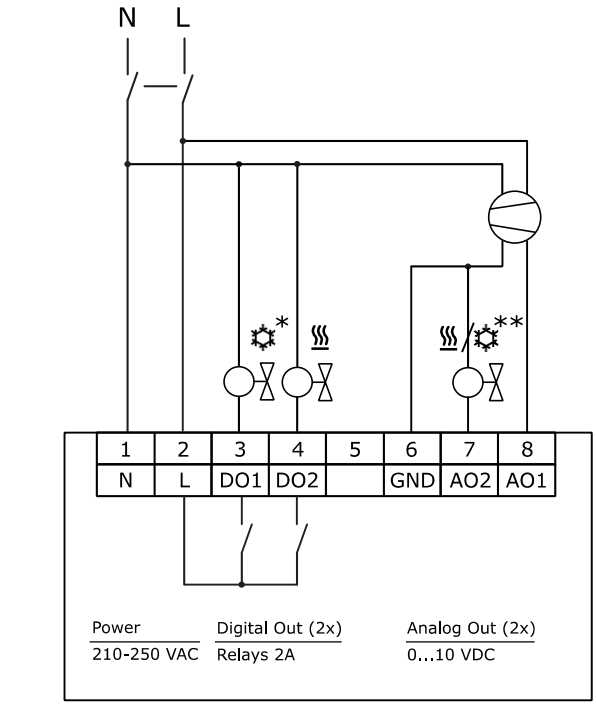

*) FC11 = 2, ♨/☼ **) FC27 = ♨/☼

© Vector Controls LLC, USA

TLC3-FCM-R2-T-U-230

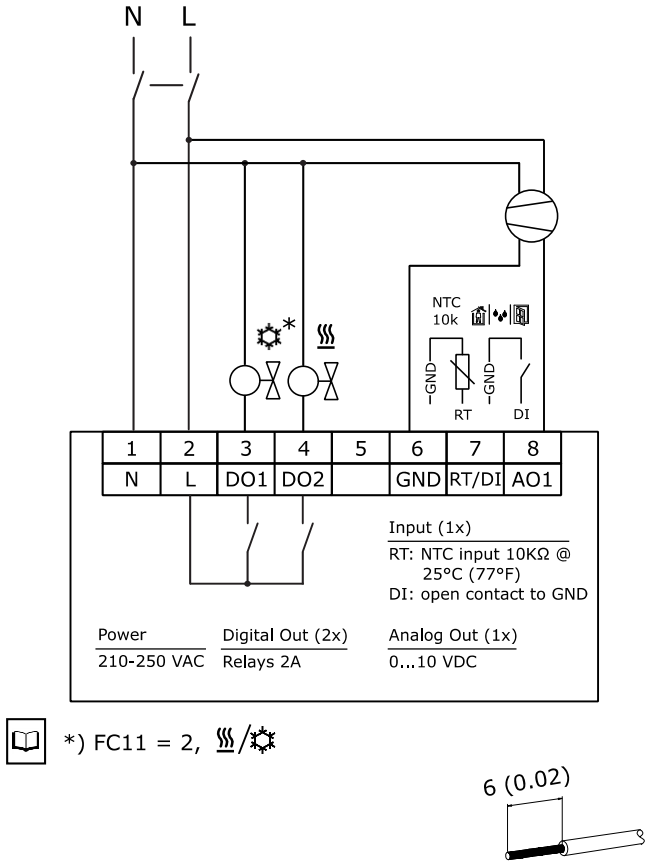

Description:

Terminal	Signal	Type	Function
1	N	Power supply: 230V Neutral	
2	L	Power supply: 230V Line	
3	DO1	Digital output 230V AC	Valve Cooling or 2-pipe
4	DO2	Digital output 230V AC	Valve Heating
5		Not used	Not used
TLC3-FCM2-R2-U:			
6	GND	Signal common:	
7	AO2	Analog output 0…10 VDC	Heating or cooling based on FC27
8	AO1	Analog output 0…10 VDC	Fan
TLC3-FCM-R2-T-U:			
6	GND	Signal common:	
7	RT/DI	Input NTC 10kΩ @ 25°C (77°F) or open contact to GND	
8	AO1	Analog output 0…10 VDC	Fan

Mounting and installation

Mount the controller on an interior wall, approx. 1.5 m above the floor, in a place with average room temperature. Avoid direct sunlight, heat sources, doors, outside walls and air outlets. The location is less critical if an external temperature sensor is used.

Mount and connect the controller as shown in the installation sheet supplied with the device, and wire it according to the connection diagram above.

© Vector Controls LLC, USA