

Fan coil controller TRA-F22x-A

Fan coil controller for 3-speed fans with modulating valves and two external inputs standalone, BACnet MS/TP or Modbus.

General Description

The TRA-F22x-A is an electronic fan coil controller for room temperature control. It supports motorized valves and 1- or 3-speed fans in 2-pipe and 4-pipe fan coil units for heating or cooling. Additional inputs can be used for an external temperature sensor, room occupancy (motion) detection and other functions. The controller offers Comfort, Economy and Protection operating modes. The TRA-F221-A includes a MODBUS RTU and the TRA-F222-A a BACnet MS/TP interface. Both types can be easily integrated into a building automation system.

Typical application includes:

- Fan coil systems
  - 2-pipe fan coil (cooling or heating on/off or modulating valves)
  - 2-pipe fan coil with 3-point valve (cooling or heating valve)
  - 2-pipe fan coil and electric heater
  - 4-pipe fan coil (cooling and heating on/off or modulating valve)
- Floor heating systems (on/off or 3-point valve)
- Chilled/Heated ceilings or chilled beams systems (on/off or 3-point valve)

Features

- LCD display with backlight
- Room temperature control via built-in temperature sensor
- 2 configurable inputs temperature or digital
- 2 analog outputs for modulating valve control or analog fan
- 3 digital outputs for 1- or 3-speed fan control or digital valves (on/off or 3-position valve)
- Comfort, Economy and Protection operating mode
- Display of current room temperature or temperature set point in °C or °F
- Display of outdoor temperature received from Modbus master
- Manual or automatic heating / cooling changeover
- Select operating mode via operating mode button on the controller
- Minimum and maximum limitation of room temperature set point
- Floor heating temperature limitation
- Key lock function
- BACnet MS/TP interface (TRA-F222 only)
- RTU Modbus slave interface (TRA-F221 only)
- Reload default settings for commissioning and control parameters
- 100…240 VAC operating voltage
- Flush mount on all 75x75x35mm wall mounting box or larger boxes
- Selection of application via parameter
- No data loss on power fail

© Vector Controls LLC, USA
www.vectorcontrols.com

Types and Ordering

Product Name	Product No.	Description / Type	Size / Length	Weight
Controller				
TRA-F220-A	40-100274	Fan coil controller standalone	88 x 88 x 41 mm (3.5 x 3.5 x 1.6 in)	168 g (5.92 oz)
TRA-F221-A	40-100256	Fan coil controller with Modbus	88 x 88 x 41 mm (3.5 x 3.5 x 1.6 in)	168 g (5.92 oz)
TRA-F222-A	40-100311	Fan coil controller with BACnet	88 x 88 x 41 mm (3.5 x 3.5 x 1.6 in)	168 g (5.92 oz)
Installation box (optional)				
AMB-001	40-510009	Flush mounting installation box	80 x 80 x 40 mm (3.2 x 3.2 x 1.6 in)	40 g (1.41 oz)
AMB-006	40-510101	Surface mounting installation box	82 x 82 x 36 mm (3.2 x 3.2 x 1.4 in)	41 g (1.44 oz)
Passive temperature sensor with flying lead (NTC 10kΩ at 25 ºC (77 °F))				
S-Tn10-2	40-200001	-	2 m (6 ft.) PVC cable	-
S-Tn10-6	40-200142	-	6 m (19 ft.) PVC cable	-
Passive temperature sensor for duct mounting (NTC 10kΩ at 25 ºC (77 °F))				
SD-Tn10-12-2	40-200002	12 cm (4.7 inch) probe	2 m (6 ft.) PVC cable	-
SD-Tn10-20-2	40-200003	20 cm (7.8 inch) probe	2 m (6 ft.) PVC cable	-
SDB-Tn10-12-1	40-200124	12 cm (4.7 inch) probe	-	-
SDB-Tn10-20-1	40-200133	20 cm (7.8 inch) probe	-	-
Passive temperature sensor for contact mounting on pipes (NTC 10kΩ at 25 ºC (77 °F))				
SC-Tn10-2	40-200095	-	2 m (6 ft.) PVC cable	-
SC-Tn10-6	40-200159	-	6 m (19 ft.) PVC cable	-
Passive temperature sensor for indoor mounting (NTC 10kΩ at 25 ºC (77 °F))				
SRA-Tn10	40-200005	Indoor temperature sensor	88 x 88 x 21 mm (3.5 x 3.5 x 0.8 in)	-
Passive temperature sensor for outdoor mounting (NTC 10kΩ at 25 ºC (77 °F))				
SOD-Tn10-1	40-200108	Outdoor temperature sensor	64 x 64 x 36 mm (2.5 x 2.5 x 1.4 in)	-

Additional sensors and accessories can be found on the Vector Controls home page www.vectorcontrols.com.

Technical Specifications

Caution! This device is intended to be used for comfort applications. Where a device failure endangers human life and/or property, it is the responsibility of the owner, designer and installer to add additional safety devices to prevent or detect a system failure caused by such a device failure. Vector Controls or its affiliates cannot be held liable for any damage caused by such a failure. Failure to follow specifications and local regulations may endanger life, cause equipment damage and void warranty.

Power supply	Power requirements	100…240 VAC, 50/60 Hz
	Power consumption	Max. 5 VA
	Electrical connection	Screw terminals Wire 0.15…2.05 mm2 (AWG 26…14)
Built-in sensor	Temperature range	0…50 °C (32…122 °F)
	Accuracy 0…50 °C	0.5 °C (1 °F)
Signal inputs	Digital and temperature input	Selectable via parameter
	Temperature range	-20…80 °C (-4…176 °F)
	Temperature accuracy	0.5 °C (1 °F) at 0…50 °C (32…122 °F) 1.0 °C (2 °F) at <0 °C (<32 °F), >50 °C (>122 °F)
	Type & range of temperature sensor	NTC (Sxx-Tn10): -40…140 °C (-40…284 °F)
Signal outputs	Relays outputs (SPST NO)	0…250 VAC, resistive load current 5A, inductive 2A
	Insulation strength between relays and system electronics between neighboring contacts	 2500V to EN 60 730-1 2500V to EN 60 730-1
	Electronic control type	2.B (micro-disconnection)
	Analog outputs Output signal Resolution Maximal load	 0…10 VDC 10 bit, 9,7 mV Voltage signal: ≥1kΩ

© Vector Controls LLC, USA
www.vectorcontrols.com

Temperature resolution	Displayed temperature	0.1 °C (0.5 °F)
	Set point	0.5 °C (1 °F)
Network	Hardware interface Max nodes per network Max nodes per segment	RS485 in accordance with EIA/TIA 485 247 128
	Conductor wire Impedance	Shielded Twisted Pair (STP) cable 100 – 130 Ω
	Galvanic isolation	The communication circuitry is isolated
	Network topology	According Modbus manual (Modbus over serial line)
	Recommended maximum length per chain	1200 m (4000 ft.)
Modbus TRA-F221-A	Communication standard	Modbus RTU (www.modbus.org)
	Default setting	38400 baud rate, even parity, 1 stop bit
	Communication speed (baud rate)	2400, 4800, 9600, 19200, 38400, 57600, 115200
	Modbus RTU protocol (8 data bits)	no parity – 1 or 2 stop bits; even or odd parity – 1 stop bit
BACnet TRA-F222-A	Communication standard	BACnet MS/TP
	Default setting	38400 baud rate
	Communication speed (baud rate)	9600, 19200, 38400, 57600, 76800, 115200
Environment	Operation Climatic conditions Temperature Humidity	To IEC 721-3-3 class 3K5 0…50 °C (32…122 °F) <85 % RH non-condensing
	Transport & storage Climatic conditions Temperature Humidity Mechanical conditions	To IEC 721-3-2 and IEC 721-3-1 class 3K3 and class 1K3 0…50 °C (32…122 °F) <95 % RH non-condensing class 2M2
Standards	Safety class	II (IEC 61140)
	Degree of protection	IP30 to EN 60529
General	Material	Fire proof PC+ABS plastic (UL94 class V-0)
	Dimensions front part (H x W x D) Dimensions back part (H x W x D)	88 x 88 x 16 mm (3.5 x 3.5 x 0.6 in) 67 x 61 x 25 mm (2.6 x 2.4 x 1.0 in)
	Weight (including package)	250 g (8.81 oz)

Product testing and certification

CE Declaration of Conformity

Information on the conformity of our products can be found on our website www.vectorcontrols.com on the corresponding product page under "Downloads".

Dimensions, mm (inch)

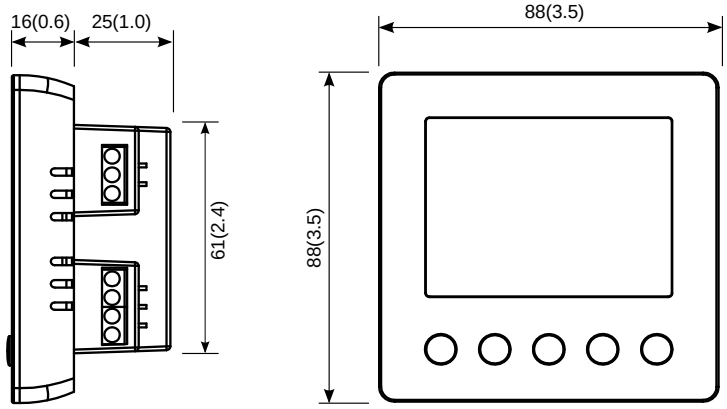

For flush mounting, a 75 x 75 x 35 mm (3.0 x 3.0 x 1,4 inch) installation box or larger must be used. See section "Types and Ordering" for recommended installation boxes.

© Vector Controls LLC, USA
www.vectorcontrols.com

Connection diagram

The wiring for the different predefined TRA-F22x-A applications can be found in the engineering manual (section "Application modes: Wiring diagrams of outputs").

A typical connection of the TRA-F22x-A is shown below:

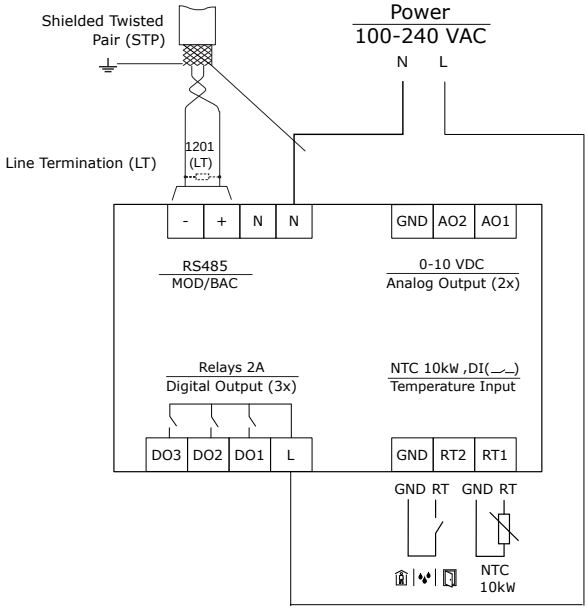

TRA-F220-A: Stand alone
TRA-F221-A: Modbus RTU
TRA-F222-A: BACnet MS/TP

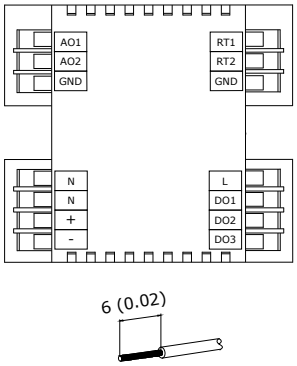

Selection of actuators and sensors

Temperature sensors:
Use Vector Controls NTC sensors to achieve maximum accuracy, see ordering list in section "Types and Ordering".

Binary auxiliary devices (e.g. fans, on/off valves, etc.)**:**
Do not directly connect devices that exceed specified limits in technical specifications – observe startup current on inductive loads.

Mounting and installation

For details see the TRA-F22x-A installation sheet no. 70-000957 (www.vectorcontrols.com).

Sealing of cable entries

Important! All cable entries into the connection box must be sealed to prevent air draft, which could otherwise affect the sensors in the device and prevent correct measurements!

© Vector Controls LLC, USA
www.vectorcontrols.com