TLC3-FCR-M-U
Programmable PID Fan Coil Controller

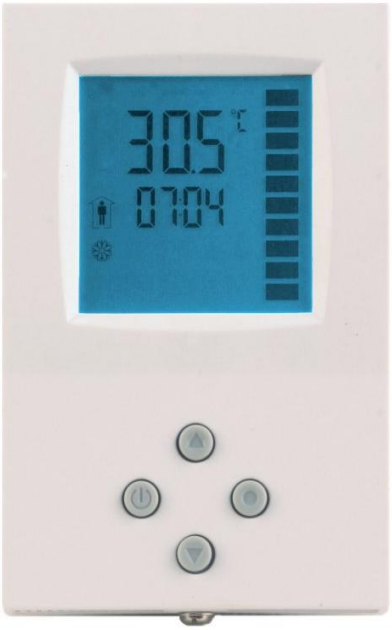

Features

- Proven PID control algorithm reduces room temperature fluctuations and energy consumption
- Temperature control for 2- and 4-pipe fan coil systems: modulating heating, cooling or fan only
- Automatic or manual control of 3-speed fans
- Economy mode and setpoint limits for energy saving
- Password-protected user and control parameters
- Low power consumption < 1 W, display in °C or °F
- Deluxe version: clock with time schedules, blue backlight, infrared remote control option

Applications

- Fan coil units in 2- or 4-pipe systems, radiators and chilled ceilings
- Constant or variable air volume systems with 3-stage fans
- Individual room control in hotel rooms, meeting rooms and offices
- PID control of up to 2 modulating valves (0–10 V) for heating and cooling

General Description

The TLC3-FCR-M-U is a stand-alone electronic fan coil controller with one control loop. The TLC3-FCR-M2-U is designed for 2-pipe systems: 1 internal NTC temperature sensor, 1 external passive input for temperature or a potential-free contact, 3 relay outputs for the fan speeds and 1 analog output (0–10 V). The TLC3-FCR-M4-U is designed for 4-pipe systems: 1 internal NTC temperature sensor, 3 relay outputs and 2 analog outputs (0–10 V) for heating and cooling. It is configured with the standard operation terminal; no special tools or software are required.

Ordering

Item Name	Item code	Variant	Power	Features
TLC3-FCR-M2-U-24	40-10 0141	Standard	24VAC/DC	Fan coil controller with: 1 TI int, 1 external input 3 DO (Relay) Fan control 1 AO (0-10VDC) PID valve control
TLC3-FCR-M2-U-120	40-10 0151		120VAC	
TLC3-FCR-M2-U-D-24	40-10 0146	Deluxe	24VAC/DC	
TLC3-FCR-M2-U-D-120	40-10 0156		120VAC	
TLC3-FCR-M4-U-24	40-10 0142	Standard	24VAC/DC	1 TI int 3 DO (Relay) Fan control 2 AO (0-10VDC) PID valve control
TLC3-FCR-M4-U-120	40-10 0152		120VAC	
TLC3-FCR-M4-U-D-24	40-10 0147	Deluxe	24VAC/DC	
TLC3-FCR-M4-U-D-120	40-10 0157		120VAC	

© Vector Controls LLC, USA
www.vectorcontrols.com

Wiring Diagram

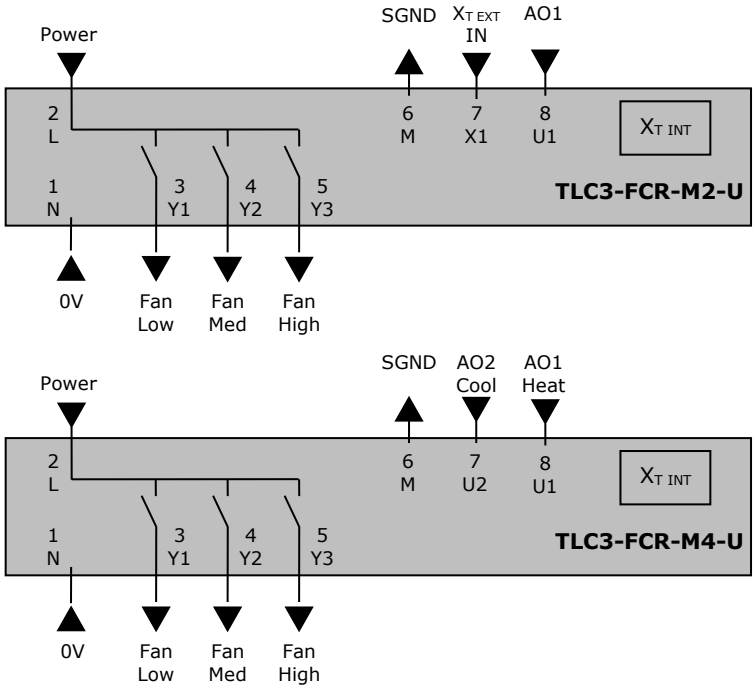

Description

N	Power supply:	0V Neutral
L	Power supply:	-24: 24VAC/DC, -120: 120VAC,
Y1	Binary output:	Fan speed low
Y2	Binary output:	Fan speed medium
Y3	Binary output:	Fan speed high

TLC3-FCR-M2-U:

M	Signal common:	Common 0 potential for inputs and analog outputs.
X1	External input:	NTC 10kΩ @ 25°C (77°F) or open contact to SGND
U1	Analog output:	0…10 V DC

TLC3-FCR-M4-U:

M	Signal common:	Common 0 potential for inputs and analog outputs.
U2	Analog cooling output:	0…10 V DC
U1	Analog heating output:	0…10 V DC

Selection of fans

Do not directly connect devices that exceed 2A. Observe startup current on inductive loads! Do not connect more than one fan coil unit to one controller.

Modulating Actuators:

Choose actuators with an input signal type of 0-10V DC or 2-10V DC. Observe maximal signal current of 1mA!

Mounting and installation

Mount the controller on an interior wall, approx. 1.5 m above the floor, in a place with average room temperature. Avoid direct sunlight, heat sources, doors, outside walls and air outlets. The location is less critical if an external temperature sensor is used.

Mount and connect the controller as shown in the installation sheet supplied with the device, and wire it according to the wiring diagram on page 2.

© Vector Controls LLC, USA
www.vectorcontrols.com

Technical Specification

Caution! This device is intended to be used for comfort applications. Where a device failure endangers human life and/or property, it is the responsibility of the owner, designer and installer to add additional safety devices to prevent or detect a system failure caused by such a device failure. Vector Controls or its affiliates cannot be held liable for any damage caused by such a failure. Failure to follow specifications and local regulations may endanger life, cause equipment damage and void warranty.

Power Supply	Operating Voltage		-24	-120
	AC voltage: 50/60Hz		22-26V AC/DC	100-130 VAC
	Power Consumption		Max 1W, 1.5 VA	
	Electrical Connection		Terminal Connectors	
	Deluxe type only: Power backup for real time clock		Min 48h if charged for 24h	
Signal Inputs	Temperature Inputs Range Accuracy		RT Internal, External (Sxx-Tn10 sensor) 0…50 °C (32…122 °F) 0.5°C (1°F)	
Signal Outputs	Digital Switching Outputs Switching Type AC Switching power Insulation strength between relays contacts and system electronics: between neighboring relays contacts		DO1 to DO3 Relays 2A max. each output For -120 type: 3750V AC to EN 60 730-1 1250V AC to EN 60 730-1	
	Analog Outputs Output Signal Minimum impedance / Max load		AO1, For TLC3-FCR-M4 AO2 DC 0…10 V 10kOhm, 1mA.	
Environment	Operation Climatic Conditions Temperature Humidity		To IEC 721-3-3 class 3 K5 0°C …50°C (32°F…122°F) <95% R.H. non-condensing	
	Transport & Storage Climatic Conditions Temperature Humidity Mechanical Conditions		To IEC 721-3-2 and IEC 721-3-1 class 3 K3 and class 1 K3 -25°C…70°C (-13°F…158°F) <95% R.H. non-condensing class 2M2	
Standards	CE conformity EMC Directive Low Voltage Directive		 2004/108/EC 2006/95/EC	
	Product standards Automatic electrical controls for household and similar use Special requirement on temperature dependent controls		 EN 60 730–1 EN 60 730–2–9	
	Electromagnetic compatibility for domestic sector		Emissions: EN 60 730-1 Immunity: EN 60 730-1	
	Degree of Protection		IP30 to EN 60 529	
	Pollution Class		II (EN 60 730-1)	
	Safety Class:	for -24 types	III (IEC 60 536)	
	Overvoltage Category:	for -24 types	I (EN 60 730-1)	
General	Dimensions (H x W x D)	Front part: Power case:	16 x 73 x 113mm (0,7 x 2.9 x 4.5 in.) 60 x 50 x 32mm (2.4 x 2.0 x 1.3 in.)	
	Material:	Cover, back part Mounting Plate	ABS plastic (UL94 class V-0) Galvanized Steel	
	Weight (including package)	for -24 types for -120 types	standard: 270g (9.5oz), deluxe: 275g (9.7oz) standard: 295g (10.5oz), deluxe: 305g (10.8oz)	

© Vector Controls LLC, USA
www.vectorcontrols.com

Dimensions

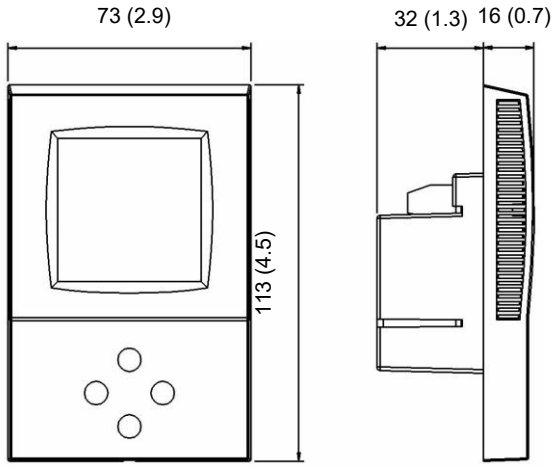

Space required in flush mounting box:
(H x W x D)
60 x 50 x 32mm (2.4 x 2.0 x 1.3 in.)

Distance for mounting screws:

Horizontal 55 to 60mm (2.2 to 2.4 in.)
Vertical: 55 to 93mm (2.2 to 3.7 in.)

© Vector Controls LLC, USA
www.vectorcontrols.com

Display and Operation

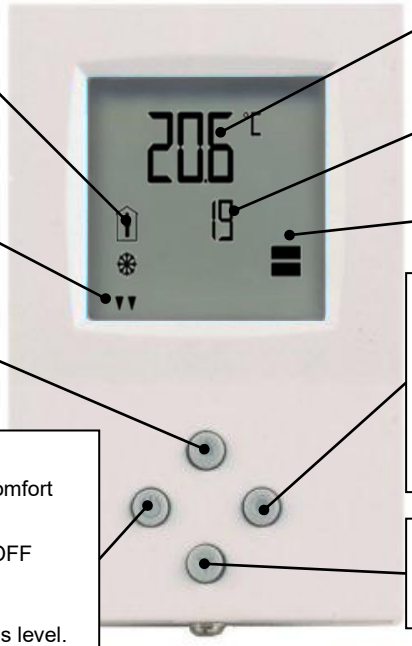

Mode
Display of operation mode

Indicators
1 Remote temperature sensor

Up:
Increase setpoint

(Parameter setting: scroll menu options and parameters)

Left (POWER):

Press < 2 sec.: Toggle Economy - Comfort mode or switch from OFF to ON

Press > 2 sec.: Turn unit OFF. Text OFF displayed with current time (deluxe) temperature (standard)

(Parameter setting: Return to previous level. ESC)

Large Digits: Display of input or parameter value.

Small Digits:
Display of setpoint, clock or parameter number.

Vertical Bar: (fan speeds 1-3 or proportional output in 10% steps)

Right (OPTION)

Press < 2 sec.: Select fan speed: Low, medium, high or auto

Press > 2 sec.: Manual H/C change

(Parameter setting: ENTER to select menu option, accept parameter change)

Down: Decrease setpoint

(Parameter setting: scroll menu options and parameters)

Operation mode		
	Comfort (occupied)	All control functions operating per set points.
	Economy (unoccupied):	Set points shifted according to *Parameters FC04.* Economy mode and setpoint shift may be disabled with UP06
OFF	Energy Hold Off	Outputs are off, inputs monitored for alarm condition
	Heating	Output activates if temperature lower than setpoint
	Cooling	Output activates if temperature higher than setpoint
	Fan	Fan is running, the vertical bars show active speed 1-3
	Manual mode	Manual override of fan speed, fan only mode or override of time schedule active.
	Schedule	Deluxe only: Time schedule is active

© Vector Controls LLC, USA
www.vectorcontrols.com

Power Failure

All the parameters and set points are memorized and do not need to be reentered. Depending on **UP05** the unit will remain switched off, switch on automatically or return to the operation mode it was in before the power failure.

Deluxe version only: Timer operation and daytime setting will be retained for 24h. The controller has to be connected to a power supply for at least 10 hours for the backup function to operate accordingly.

Frost Protection

The controller will enter frost protection mode if the room temperature drops below 5°C (41°F). All heating outputs will be fully opened. Frost protection mode will be left once the temperature reaches 10°C (50°F). Frost protection display will remain until a button is pressed. Frost protection can be enabled/disabled using user parameter UP-09

Error messages

Following error condition may be shown:

Err1: The connection to the temperature sensor may be interrupted or the temperature sensor is damaged. The output is switched off. Verify parameter settings and wiring.

FP: Steady: Frost protection is active.
Blinking: Frost protection activated in the past and is now inactive. Confirm with OPTION key.

Manual heat – cool change

To manually change heating or cooling mode press the OPTION key for more than 2 seconds. Access to manual heat – cool change may be disabled by parameters.

For standard models: Press OPTION > 2 sec. SEL and H-C is displayed. For deluxe models: Press OPTION > 2 sec. SEL and current time is displayed. Press UP key twice. SEL and H-C is displayed. Press OPTION again to toggle Heating, Cooling and Fan only modes.	SEL H-C 

© Vector Controls LLC, USA
www.vectorcontrols.com

Clock operation

The deluxe model contains a quartz clock with battery back-up. Up to 4-time schedules with each 4 mode changes based on time and day of the week may be programmed. A blinking clock indicates that the time has not been set or if the unit was without power for longer than 48 hours. The time needs to be set to allow time schedules to operate.

Clock setup

Press OPTION > 2 sec. SEL and current time displayed Press OPTION < 2 sec. to change time, Minutes blink: UP/DOWN to changes, OPTION to save, Hours blink: UP/DOWN to changes, OPTION to save, Press OPTION to save time, DAY1 blinks: UP/DOWN to change, OPTION to save	SEL 00:00 DAY1 (Mon)

Creating time schedules

Step 1: Selection and enabling of time schedules

Press OPTION > 2 sec. SEL and current time displayed Press UP: SEL and PRO displayed, clock symbol blinks Press OPTION: PRO1 shows with 1 blinking. UP/DOWN select time schedule group Press OPTION OFF/ ON blinks, UP/DOWN to change, OPTION to save	SEL PRO 	Pro1-Pro4 OFF/ON

Step 2: Select weekdays

This time schedule will be active during the selected weekdays Press UP/DOWN to step through available options: d1-7, d1-6, d1-5, d6-7, day1, day2, day3, day4, day5, day6, day7 Day 1 stands for Monday, day 2 for Tuesday and so forth Press OPTION to save day selection	Pro1 d1-7

Step 3: Selected action of first switching event

One bar on the right side indicates the first switching event Press UP/DOWN to select action for first switching event: No = switching event not active OFF = switches unit off, reset (UP17) active if switched to ON manually. Eco = sets operation mode to On and Economy (Not occupied), reset (UP17) active if set to comfort manually On = sets operation mode to On and Comfort (Occupied) Uni = University mode, reset (UP17) not active if manually activated Press OPTION to select switching time of first event	Pr01 no

Step 4: Selected time of first switching event

Press UP/DOWN to select switching time: Select switching time 00:00 to 23:45 in 15-minute steps Press OPTION to complete and select action of second switching event	Pr01 08:00

Step 5: Select actions and time of switching event 2 - 4

Repeat Step 3 and Step 4 for the remaining switching events. If a switching event is not needed, set it to "no" The bars on the right side indicate number of switching event After completing the 4th switching event, the process returns to the selection of the time schedule on step 1.	Pr01 08:00 

➔ UNI: University mode: This switching mode is used for rooms such as lecture rooms and auditoriums that might be occupied during a certain time. During this time the reset is not active. The unit will not start itself when UNI mode is active. It still needs to be manually activated. This is to avoid unnecessary heating or cooling of such rooms while they are not occupied.

➔ A blinking clock indicates that the time needs to be set. Time programs will not operate if the time is not defined. See section Clock setup for instructions on how to set the time.

➔ Access to time schedules may be disabled with UP-04.

© Vector Controls LLC, USA
www.vectorcontrols.com

Operation with OPR-1

The deluxe version may be alternatively operated with an infrared remote controller.

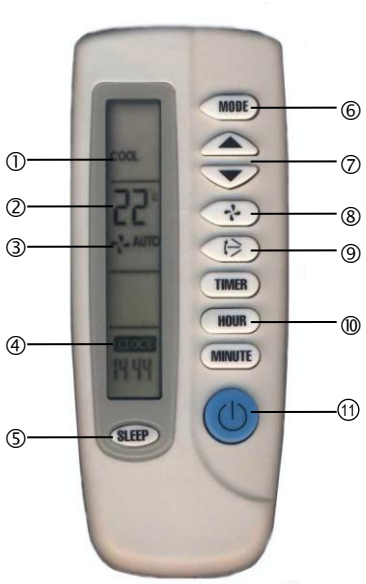

1. Mode indication, Auto, Dry, Cool, Fan, Heat
2. 2-digit display of setpoint
3. Fan indication
4. 4-digit display of current time or delayed switching time
5. Economy button: Toggles Economy/Comfort mode
6. Mode button, changes operation modes
7. UP/DOWN Button: Set point adjustment buttons
8. FAN Button: Changes fan speed, low – medium – high or Auto
9. Boost button, activates full output for 5 Minutes
10. Time related buttons: Timer, Hour, Minute
11. POWER Button: Operation mode ON – OFF

Switching ON

The unit is switched on by pressing the POWER button. It will start up in comfort mode.

Changing between COMFORT and ECONOMY

Pressing the SLEEP button toggles between ECONOMY and COMFORT modes.

Switching OFF

Pressing the POWER while the unit is on, will switch the unit off. The current time will be displayed in the LCD of OPR-1.

Changing of set points

Only the set points for the temperature loop may be changed. Set point range is 15 to 30 °C.

Changing of fan speeds

Repeatedly pressing the fan speed button steps through low, medium, high and automatic fan speeds. Automatic fan speed will not be activated in FAN ONLY mode.

Boost

Pressing the boost button activates a 5-minute boost. The output will be fully opened for the period of 5 minutes independent of demand. This may be used to change stale air during a meeting break or when entering the room.

Clock settings

The remote controller contains a daytime clock. In order to set the clock, press HOUR and MINUTE button together until the clock starts blinking. Then set the correct time with the HOUR and MINUTE buttons. Confirm by pressing the TIMER button. The clock of the OPR will set the clock of the controller.

Delayed switching

The unit may be delayed switched on or off using the timer button. Pressing the timer button once will display Timer ON if currently in OFF mode or TIMER OFF if currently in ON mode. Set the time when the unit is supposed to switch on or off using the HOUR and MINUTE buttons.

Mode changes

Repeatedly pressing the mode button may activate the following operation modes: HEAT, COOL and FAN ONLY. The mode change may be disabled using the UP parameters.

Note:

The remote controller is currently only available in °C mode.

© Vector Controls LLC, USA
www.vectorcontrols.com

Empty Page

© Vector Controls LLC, USA
www.vectorcontrols.com

Smart Sensors and Controls
Made Easy!

Quality - Innovation – Partnership

Vector Controls LLC
USA

infous@vectorcontrols.com
www.vectorcontrols.com

© Vector Controls LLC, USA
www.vectorcontrols.com