MZ3-FS-V01
3-Level Switch

Function

- Electronic 3-level switch with touch panel
- Manual operation with up to 3 Levels: MIN, MID, MAX
- Automatic reset of the level MAX to specified level (per default no reset)
- One 0…10 VDC output to output defined voltage levels
- Password protected settings
- Copy of settings with accessory (AEC-PM2)
- Design fits to the Feller SNAPFIX® program with the design lines EDIZIOdue® and EDIZIO.liv®.
  (Note: SNAPFIX® mounting plate and EDIZIO design frames are not included and must be ordered separately)



Applications

Comfort ventilation, for example for very well insulated living rooms which must be ventilated according to regulations or for controlling dampers, valve drives, blinds or windows, etc.

General description

The MZ3-FS-V01 is a microprocessor-controlled precision level switch with touch panel. Through parameters the level switch may be configured. Settings such as switching levels for each step may be adjusted. The level switch is configuration with a programming device called OPA-S. Configuration can as well be updated using a remote memory device called AEC-PM2.

Types and ordering

Product name	Product No.	Description	Features
MZ3-FS-V01-B3-T3	40-100303	- Blue LED - White background - Lettering: MIN, MID, MAX	Compact positioner/controller with one 0-10 VDC output. Operation as 3-level switch with touch panel.
Note: Mounting plate and frame are not included. See below for options.			

Accessories

AMM-DS-W	40-510104	Feller EDIZIOdue® frame white	Includes SNAPFIX® mounting plate
AMM-LS-W	40-510105	Feller EDIZIO.liv® frame white	Includes SNAPFIX® mounting plate
OPA-S	40-500006	Programming and display device	LCD display for surface mounting or handheld operation.
AEC-PM2	40-500130	Memory-Device. Used for copying settings	Stores settings of MZ3

Interface to the ventilation system

The 3-level switch works with all systems that are designed for a 0…10 VDC or 2…10 VDC input signal.

© Vector Controls GmbH, Switzerland
www.vectorcontrols.com

Technical Data

Caution! This device is intended to be used for comfort applications. Where a device failure endangers human life and/or property, it is the responsibility of the owner, designer and installer to add additional safety devices to prevent or detect a system failure caused by such a device failure. Vector Controls or its affiliates cannot be held liable for any damage caused by such a failure. Failure to follow specifications and local regulations may endanger life, cause equipment damage and void warranty.

Power supply	Operating voltage	24 V AC/DC ± 10%, 50/60 Hz, Class 2 48 VA max.
	Power consumption	Max. 1 VA
	Electrical connection	Terminal connectors, wire 0,34-2,5 mm2 (AWG 22…13)
Signal output	Analog output Output signal Maximum load	 DC 0…10 V 2 mA or 5 kΩ
Environment	Operation Climatic conditions Temperature Humidity	To IEC 721-3-3 class 3K5 0…50 ° C (32…122 ° F) < 95% RH non-condensing
	Transport & storage Climatic conditions Temperature Humidity Mechanical conditions	To IEC 721-3-2 and IEC 721-3-1 class 3K3 and class 1K3 -25…70 °C (-13…158 °F) < 95% RH non-condensing class 2MT2
Standards	Degree of protection	Wall mounted: IP40 acc. EN 60529 Not installed: IP00 acc. EN 60529
	Safety class	III (IEC 60536)
General	Housing material:	Flame retardant PC+ABS plastic (UL94 class V-0)
	Dimensions (H x W x D) including packaging	60 x 60 x 40 mm (2.4” x 2.4” x 1.6”)
	Weight (incl. packaging)	90 g (3.2 oz)

Product testing and certification

CE Declaration of Conformity

Information on the conformity of our products can be found on our website www.vectorcontrols.com on the corresponding product page under "Downloads".

Connection diagram

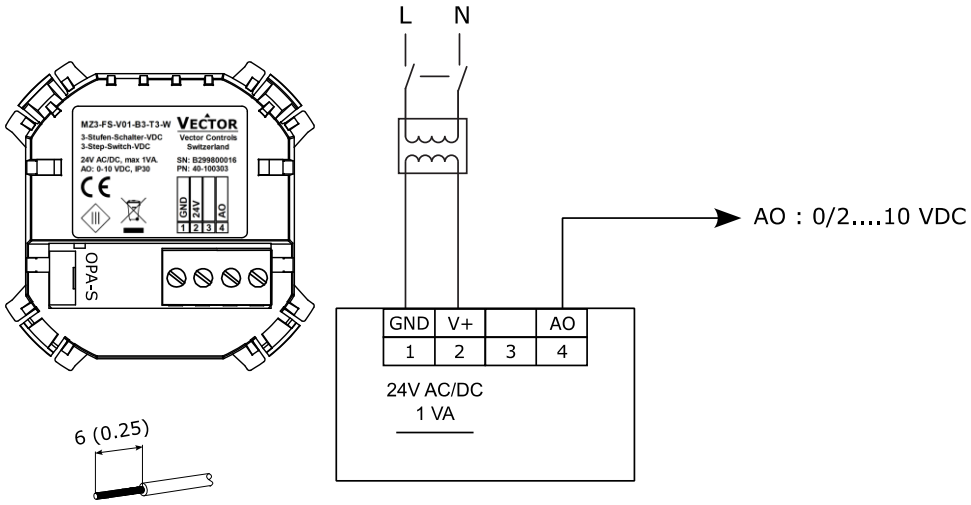

Description:

1	**GND**	Power supply:	0 V, -24 VDC, internally connected to signal common
2	**V+**	Power supply:	24 VAC, +24 VDC
3		Not used, do not connect	
4	**AO**	Analog output ventilation:	0/2…10 VDC

© Vector Controls GmbH, Switzerland
www.vectorcontrols.com

Mounting instruction

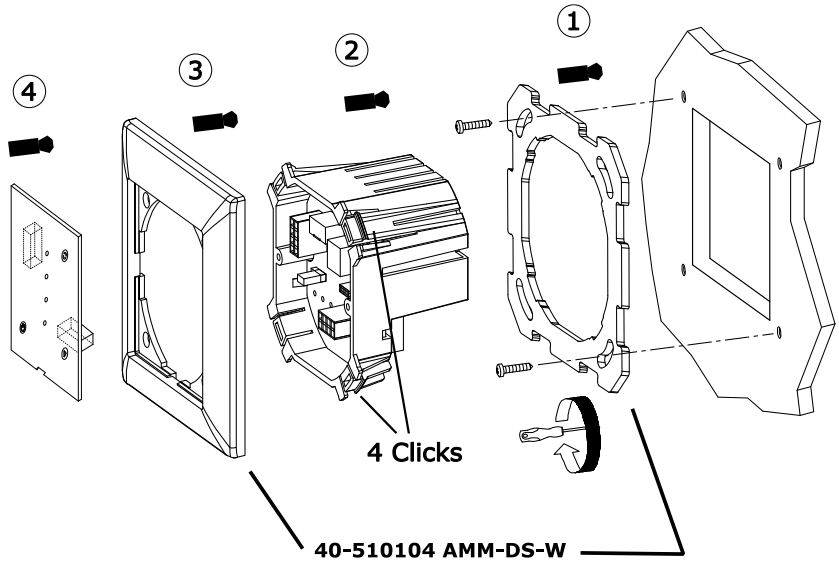

Dimensions mm (in)

The MZ3-FS fits to a Feller SNAPFIX® mounting plate with a EDIZIOdue® or EDIZIO.liv® design frame at can be incorporated into a commercially available flush box. The mounting plate and frame must be ordered separately.

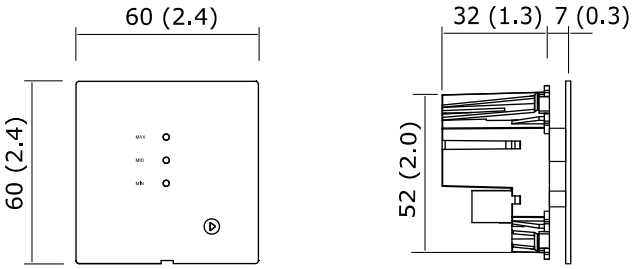

Mounting and installation

Mount the controller on an easily accessible interior wall in a standard flush box.
Mount and connect the controller as shown in the MZ3-FS-V01 installation manual no. 70-001096 supplied with the device, and wire it according to the connection diagram above.

© Vector Controls GmbH, Switzerland
www.vectorcontrols.com

Display and operation

Manual operation

The following operation modes will be activated through repeated pressing of the level button:

- Level 0 = MIN = Minimum
- Level 1 = MID = Medium
- Level 2 = MAX = Maximum

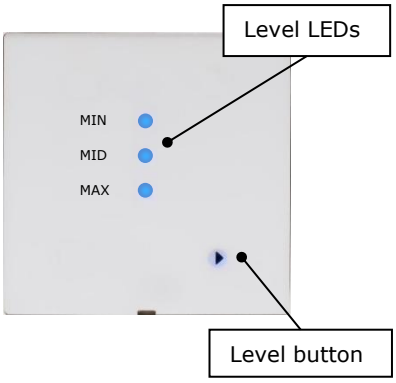

The active level is activated after 3 seconds. This prevents unnecessary switching when setting the device. The level-indication and buttons light up in blue.

The device is equipped with proximity detection. When approaching a distance of approx. 10 cm, the luminosity of the LED increases. After 30 seconds without interaction, the LEDs dim down again and thus save energy.

© Vector Controls GmbH, Switzerland
www.vectorcontrols.com

Empty Page

© Vector Controls GmbH, Switzerland

Smart Sensors and Controls
Made Easy!

Quality - Innovation – Partnership

Vector Controls GmbH
Switzerland

info@vectorcontrols.com
www.vectorcontrols.com/

© Vector Controls GmbH, Switzerland
www.vectorcontrols.com