MZ3-V11
Controller/positioner for comfort ventilation

Function

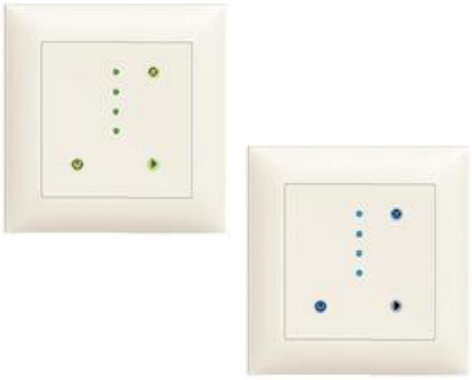

- Positioner and controller for comfort ventilation with touch panel
- Design according to Feller EDIZIOdue®
- Manual operation with up to 4 Levels, OFF, minimum air, 1st Level, 2nd Level, maximum air
- AUTO level mode: The controller activates the ventilation level based on controls curve. The controls curve may be adjusted
- AUTO Continuous mode: The controller adjusts the ventilation level gradually between adjustable minimum and maximum according to sensor value
- One 0…10 VDC input for connection of a CO2 or air quality sensor
- One 0…10 VDC controls output to control the ventilation system
- Automatic reset of the maximum air level (standard: level 0 after 120 min.)
- Password protected controls settings
- Copy of settings with accessory (AEC-PM2)

Applications

This device is designed to control ventilation systems for comfort applications. For example, for well insulated residential areas which are required to be ventilated or for controlling dampers, valve drives, blinds or windows, etc.

General description

The MZ3-V11 is a microprocessor-controlled precision positioner / proportional controller with touch panel. Through user and engineering parameters the positioner may be configured to work for most of the standard ventilation applications. The device is pre-configured according to this documentation. Settings such as switching levels of the control curve and ventilation strengths for each Level may be adjusted. The configuration may be performed using the programming device called OPA-S. This device may be used as well to visualize measuring values. Configuration can as well be updated using a remote memory device called AEC-PM2.

Types and ordering

Product name	Product No.	Description	Features
MZ3-V11-T4-W	40-100285	- Green LED - White frame, without lettering	Compact positioner / controller in a white Feller EDIZIOdue® frame, with one 0-10 VDC input and output. Operation as 4-Level switch with touch panel and AUTO function.
MZ3-V11-T4-S	40-100286	- Green LED - Black frame, without lettering	
MZ3-V11-B-T4-W	40-100287	- Blue LED - White frame - Lettering: Minimum, Normal, Maximum, Party	
MZ3-V11-B1-T4-W	40-100288	- Blue LED - White frame - Lettering: Minimum, Level I, Level II, Maximum	
Accessories			
OPA-S	40-500006	Programming and display device	LCD display for surface mounting or handheld operation.
AEC-PM2	40-500130	Memory-Device. Used for copying settings	Stores settings of MZ3

© Vector Controls GmbH, Switzerland
www.vectorcontrols.com

Interface to the ventilation system

The positioner works with all systems that are designed for a 0…10 VDC or 2…10 VDC input signal.

Technical Data

Caution! This device is intended to be used for comfort applications. Where a device failure endangers human life and/or property, it is the responsibility of the owner, designer and installer to add additional safety devices to prevent or detect a system failure caused by such a device failure. Vector Controls or its affiliates cannot be held liable for any damage caused by such a failure. Failure to follow specifications and local regulations may endanger life, cause equipment damage and void warranty.

Power supply	Operating voltage	24 V AC/DC ± 10%, 50/60 Hz, Class 2 48 VA max.
	Power consumption	Max. 1 VA
	Electrical connection	Terminal connectors, wire 0,34-2,5 mm2 (AWG 22…13)
Signal input	Analog input Impedance	0…10 VDC 98 kΩ
Signal output	Analog output Output signal Maximum load	 DC 0…10 V 2 mA or 5 kΩ
Environment	Operation Climatic conditions Temperature Humidity	To IEC 721-3-3 class 3K5 0…50 ° C (32…122 ° F) < 95% RH non-condensing
	Transport & storage Climatic conditions Temperature Humidity Mechanical conditions	To IEC 721-3-2 and IEC 721-3-1 class 3K3 and class 1K3 -25…70 °C (-13…158 °F) < 95% RH non-condensing class 2MT2
Standards	Degree of protection	Wall mounted: IP40 acc. EN 60529 Not installed: IP00 acc. EN 60529
	Safety class	III (IEC 60536)
General	Housing material:	Flame retardant PC+ABS plastic (UL94 class V-0)
	Dimensions (H x W x D) including packaging	120 x 120 x 40 mm (4,7” x 4,7” x 1,6”)
	Weight (incl. packaging)	140 g (5.0 oz)

Product testing and certification

CE Declaration of Conformity

Information on the conformity of our products can be found on our website www.vectorcontrols.com on the corresponding product page under "Downloads".

© Vector Controls GmbH, Switzerland
www.vectorcontrols.com

Connection diagram

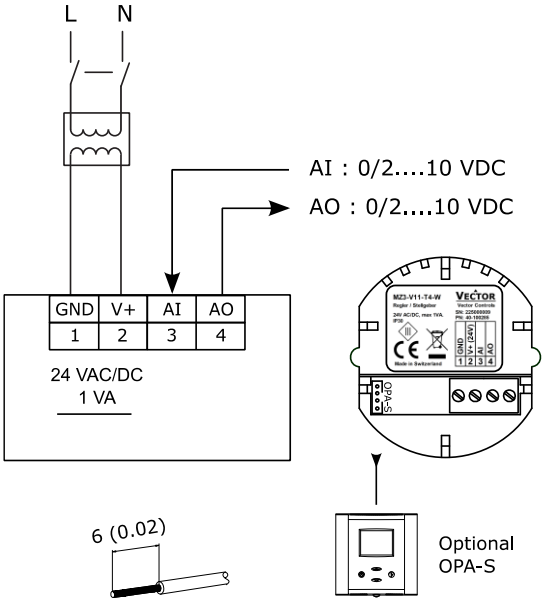

Description:

1	**GND**	Power supply:	0 V, -24 VDC, internally connected to signal common
2	**V+**	Power supply:	24 VAC, +24 VDC
3	**AI**	Analog input for sensor:	0…10 VDC
4	**AO**	Analog output ventilation:	0/2…10 VDC

View of rear part, without front panel

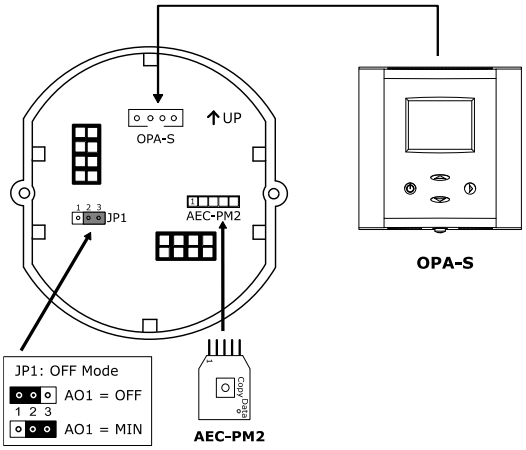

NOTE: For parameter programming, the OPA-S programming and display device must be plugged into the connector under the front panel or on the rear of the MZ3.
If an OPA-S programming and display unit is permanently connected to the MZ3, parameter programming is performed with this unit.

© Vector Controls GmbH, Switzerland
www.vectorcontrols.com

Dimensions mm (in)

The MZ3-V11 is so designed that it can be incorporated into a commercially available flush box (Feller EDIZIOdue® frame and mounting plate are included).

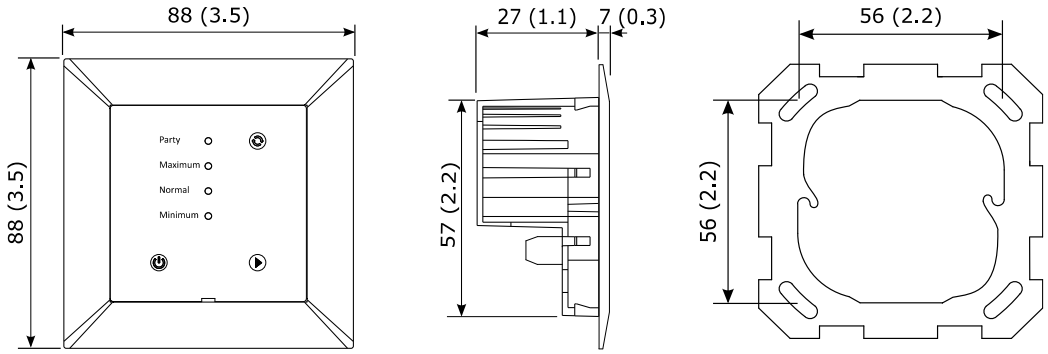

MZ3-V11-T4-W

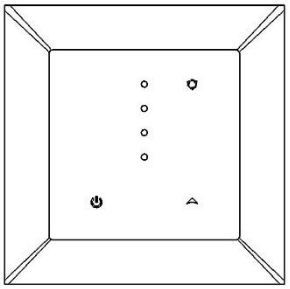

MZ3-V11-B-T4-W

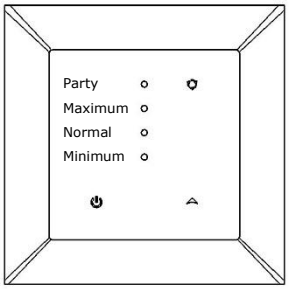

MZ3-V11-B1-T4-W

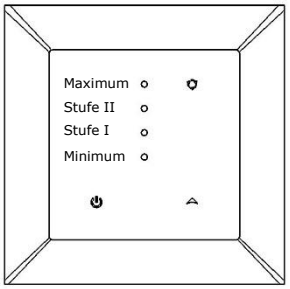

Selection of transmitters

The position transmitter works for all sensors/probes which can generate an output signal of 0…10 or 2…10 VDC. The corresponding measuring range must be observed.
Example of suitable Vector Controls CO2 sensors:

- SDC-C1-16-1
- SDC2-16-C-200.101U-1

Example of suitable Vector Controls air quality (VOC) sensors:

- SDC-Q1-16-1
- SDC2-16-THQ-210.102U-1

Further details on a variety of suitable sensors can be found on our website (www.vectorcontrols.com).

Mounting and installation

Mount the controller on an easily accessible interior wall in a standard flush box.
Mount and connect the controller as shown in the MZ3-V11 installation manual no. 70-000832 supplied with the device, and wire it according to the connection diagram above.

© Vector Controls GmbH, Switzerland
www.vectorcontrols.com