MZ3-V11
Controller/positioner for comfort ventilation

Function

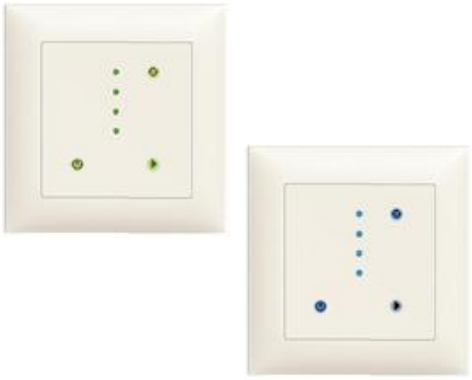

- Positioner and controller for comfort ventilation with touch panel
- Design according to Feller EDIZIOdue®
- Manual operation with up to 4 Levels, OFF, minimum air, 1st Level, 2nd Level, maximum air
- AUTO level mode: The controller activates the ventilation level based on controls curve. The controls curve may be adjusted
- AUTO Continuous mode: The controller adjusts the ventilation level gradually between adjustable minimum and maximum according to sensor value
- One 0…10 VDC input for connection of a CO2 or air quality sensor
- One 0…10 VDC controls output to control the ventilation system
- Automatic reset of the maximum air level (standard: level 0 after 120 min.)
- Password protected controls settings
- Copy of settings with accessory (AEC-PM2)

Applications

This device is designed to control ventilation systems for comfort applications. For example, for well insulated residential areas which are required to be ventilated or for controlling dampers, valve drives, blinds or windows, etc.

General description

The MZ3-V11 is a microprocessor-controlled precision positioner / proportional controller with touch panel. Through user and engineering parameters the positioner may be configured to work for most of the standard ventilation applications. The device is pre-configured according to this documentation. Settings such as switching levels of the control curve and ventilation strengths for each Level may be adjusted. The configuration may be performed using the programming device called OPA-S. This device may be used as well to visualize measuring values. Configuration can as well be updated using a remote memory device called AEC-PM2.

Types and ordering

Product name	Product No.	Description	Features
MZ3-V11-T4-W	40-100285	- Green LED - White frame, without lettering	Compact positioner / controller in a white Feller EDIZIOdue® frame, with one 0-10 VDC input and output. Operation as 4-Level switch with touch panel and AUTO function.
MZ3-V11-T4-S	40-100286	- Green LED - Black frame, without lettering	
MZ3-V11-B-T4-W	40-100287	- Blue LED - White frame - Lettering: Minimum, Normal, Maximum, Party	
MZ3-V11-B1-T4-W	40-100288	- Blue LED - White frame - Lettering: Minimum, Level I, Level II, Maximum	
Accessories			
OPA-S	40-500006	Programming and display device	LCD display for surface mounting or handheld operation.
AEC-PM2	40-500130	Memory-Device. Used for copying settings	Stores settings of MZ3

© Vector Controls GmbH, Switzerland
www.vectorcontrols.com

Interface to the ventilation system

The positioner works with all systems that are designed for a 0…10 VDC or 2…10 VDC input signal.

Technical Data

Caution! This device is intended to be used for comfort applications. Where a device failure endangers human life and/or property, it is the responsibility of the owner, designer and installer to add additional safety devices to prevent or detect a system failure caused by such a device failure. Vector Controls or its affiliates cannot be held liable for any damage caused by such a failure. Failure to follow specifications and local regulations may endanger life, cause equipment damage and void warranty.

Power supply	Operating voltage	24 V AC/DC ± 10%, 50/60 Hz, Class 2 48 VA max.
	Power consumption	Max. 1 VA
	Electrical connection	Terminal connectors, wire 0,34-2,5 mm2 (AWG 22…13)
Signal input	Analog input Impedance	0…10 VDC 98 kΩ
Signal output	Analog output Output signal Maximum load	 DC 0…10 V 2 mA or 5 kΩ
Environment	Operation Climatic conditions Temperature Humidity	To IEC 721-3-3 class 3K5 0…50 ° C (32…122 ° F) < 95% RH non-condensing
	Transport & storage Climatic conditions Temperature Humidity Mechanical conditions	To IEC 721-3-2 and IEC 721-3-1 class 3K3 and class 1K3 -25…70 °C (-13…158 °F) < 95% RH non-condensing class 2MT2
Standards	Degree of protection	Wall mounted: IP40 acc. EN 60529 Not installed: IP00 acc. EN 60529
	Safety class	III (IEC 60536)
General	Housing material:	Flame retardant PC+ABS plastic (UL94 class V-0)
	Dimensions (H x W x D) including packaging	120 x 120 x 40 mm (4,7” x 4,7” x 1,6”)
	Weight (incl. packaging)	140 g (5.0 oz)

Product testing and certification

CE Declaration of Conformity

Information on the conformity of our products can be found on our website www.vectorcontrols.com on the corresponding product page under "Downloads".

© Vector Controls GmbH, Switzerland
www.vectorcontrols.com

Connection diagram

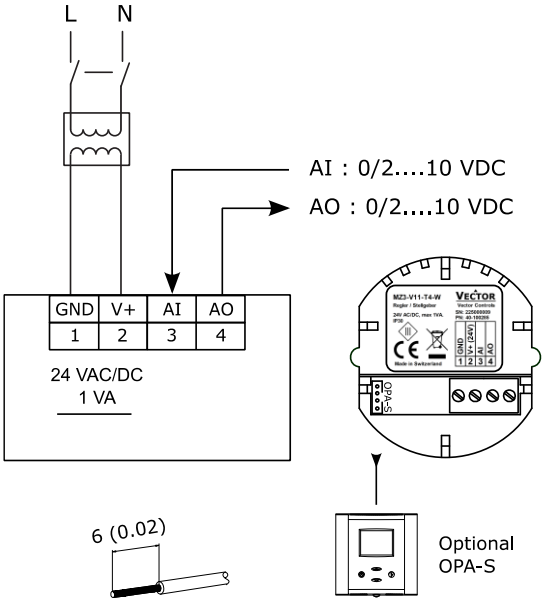

Description:

1	**GND**	Power supply:	0 V, -24 VDC, internally connected to signal common
2	**V+**	Power supply:	24 VAC, +24 VDC
3	**AI**	Analog input for sensor:	0…10 VDC
4	**AO**	Analog output ventilation:	0/2…10 VDC

View of rear part, without front panel

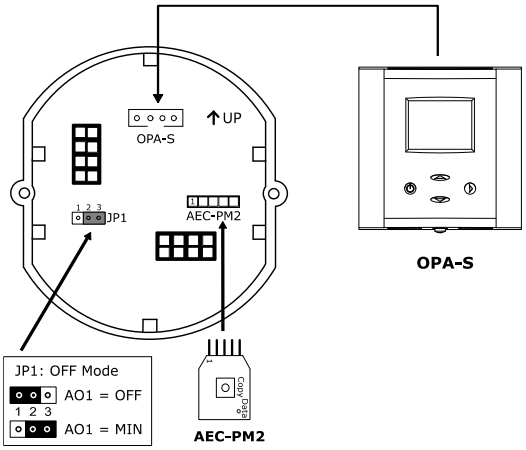

NOTE: For parameter programming, the OPA-S programming and display device must be plugged into the connector under the front panel or on the rear of the MZ3.
If an OPA-S programming and display unit is permanently connected to the MZ3, parameter programming is performed with this unit.

© Vector Controls GmbH, Switzerland
www.vectorcontrols.com

Dimensions mm (in)

The MZ3-V11 is so designed that it can be incorporated into a commercially available flush box (Feller EDIZIOdue® frame and mounting plate are included).

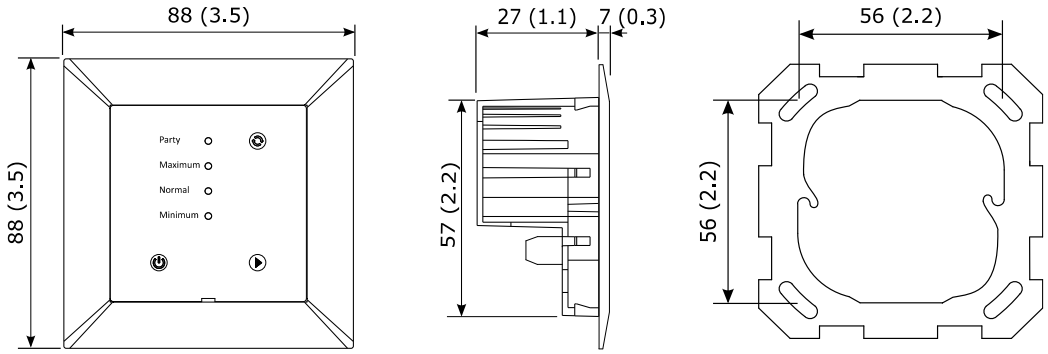

MZ3-V11-T4-W

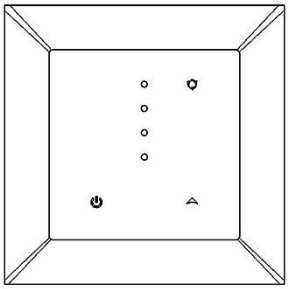

MZ3-V11-B-T4-W

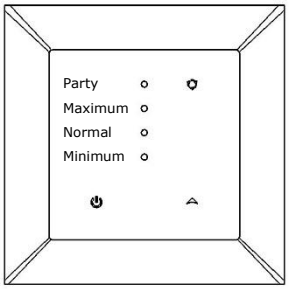

MZ3-V11-B1-T4-W

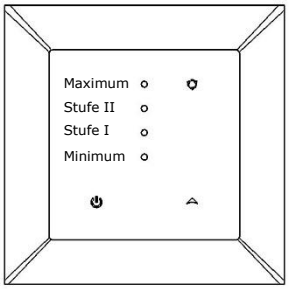

Selection of transmitters

The position transmitter works for all sensors/probes which can generate an output signal of 0…10 or 2…10 VDC. The corresponding measuring range must be observed.
Example of suitable Vector Controls CO2 sensors:

- SDC-C1-16-1
- SDC2-16-C-200.101U-1

Example of suitable Vector Controls air quality (VOC) sensors:

- SDC-Q1-16-1
- SDC2-16-THQ-210.102U-1

Further details on a variety of suitable sensors can be found on our website (www.vectorcontrols.com).

Mounting and installation

Mount the controller on an easily accessible interior wall in a standard flush box.
Mount and connect the controller as shown in the MZ3-V11 installation manual no. 70-000832 supplied with the device, and wire it according to the connection diagram above.

© Vector Controls GmbH, Switzerland
www.vectorcontrols.com

Display and operation

ON/OFF operation

The device is activated by pressing the ON/OFF button. Depending on the position of JP1, the minimum air volume remains active even during OFF mode. In OFF mode, the operating mode symbol lights up with reduced intensity.

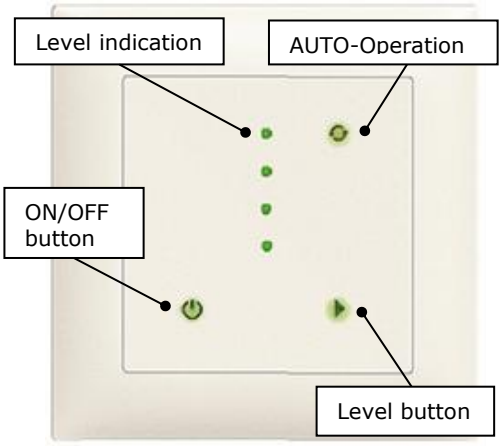

Manual operation

The following operation modes will be activated through repeated pressing of the level button:

- Level 0 = Minimum volume [Minimum]
- Level 1 = Normal volume [Normal]
- Level 2 = High volume [Maximum]
- Level 3 = Maximal volume [Party]
- Auto operation (automatic level selection)

The active level is activated after 3 seconds. This prevents unnecessary switching when setting the device. The level-indication and buttons light up in green or blue depending on the type of device.

The device is equipped with proximity detection. When approaching a distance of approx. 10 cm, the luminosity of the LED increases. After 30 seconds without interaction, the LEDs dim down again and thus save energy.

© Vector Controls GmbH, Switzerland
www.vectorcontrols.com

Operating Modes

Manual operation

In manual mode, the ventilation level is defined by means of the level button, see section „Display and operation“ on page 5.

Automatic operation

The automatic operation of the device is enabled once a signal is detected at the input AI.

Automatic operation must be activated with the level button or through the automatic reset function defined with **IP08**, see section “Display and operation” on page 5 and “Input configuration (AI)”.

The IP08 parameter defines the amount of time after which the unit will return to automatic mode if it has been manually overridden or switched off. If the unit has been switched off, it will reactivate itself once the reset time has elapsed. Setting the reset time to 0 deactivates automatic reset.

Level mode (IP00=ON)

During AUTO operation, the levels are switched by a control signal. The switching levels are defined under IP04 – IP06. The hysteresis defined with IP07 prevents rapid switching of levels in auto mode.

Function: A level activates once the input signal exceeds the activation limit (IP04-IP06). It deactivates once the input signal drops below the activation limit minus the hysteresis. For example, with a hysteresis of 10% and an activation limit of 40%, the level activates with a 40% input signal and switches down to the next lower level with a 30% input signal.

Automatic switching for certain levels may be disabled by setting an activation limit of 0. The sensor signal will then not be able to activate this particular level. This may proof useful for the highest level (boost mode) by setting IP06 = 0.

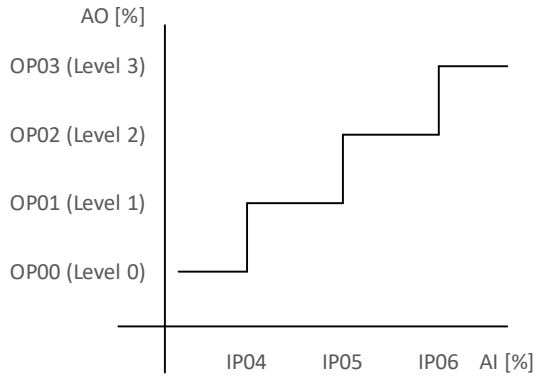

Figure 1: Function level mode

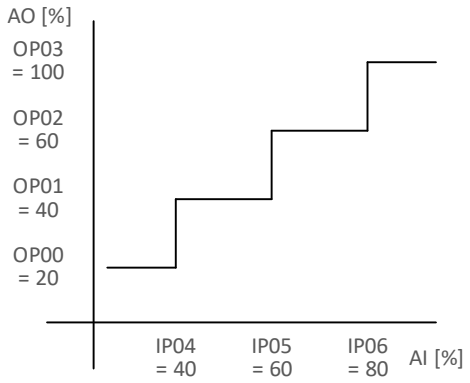

Figure 2: Example level mode

Continuous mode (IP00=OFF)

During AUTO operation, the ventilation is controlled gradually by the sensor signal. Instead of level steps, the output voltage is adjusted continuously. The sensor minimum and sensor maximum of the linear range can be set with IP04 and IP06. The output voltage then behaves linearly between OP00 and OP03.

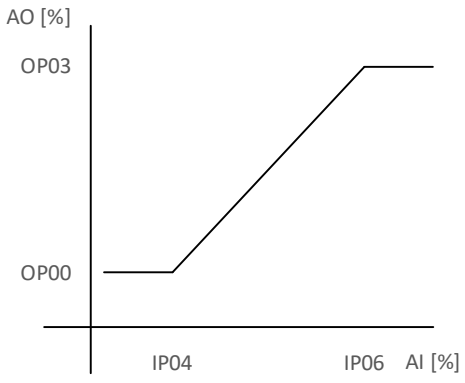

Figure 3: Function continuous mode

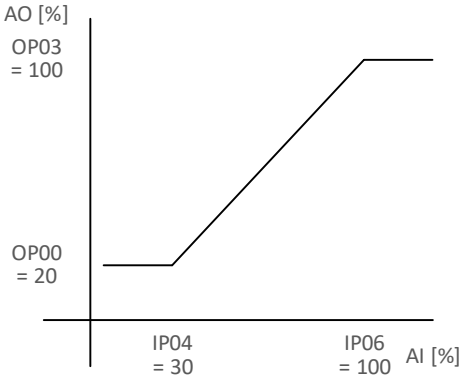

Figure 4: Example continuous mode

NOTE: If the MZ3 is used in conjunction with a Vector Controls VOC or CO2 sensor, the following settings are recommended:

- IP04 = 20% (20% AQI / 400 ppm)
- IP06 = 100% (100% AQI / 2000 ppm)
- OP00 = 0% (0 V)
- OP03 = 100% (10 V)

© Vector Controls GmbH, Switzerland
www.vectorcontrols.com

Empty Page

© Vector Controls GmbH, Switzerland

Smart Sensors and Controls
Made Easy!

Quality - Innovation – Partnership

Vector Controls GmbH
Switzerland

info@vectorcontrols.com
www.vectorcontrols.com/

© Vector Controls GmbH, Switzerland
www.vectorcontrols.com