TCI-W13-U, TCI-W23-U Series wall mounted universal controller



Features

- Universal PI and/or binary control for any analog input/output signal and range
- Multiple auxiliary functions: heat-cool auto changeover, automatic enable, set point compensation
- Differential, averaging, min and max functions
- Cascading of control loops (-W23 type)
- Alarm monitoring of low and high limits on all inputs
- Programmable reaction in case of alarm
- Feedback function for inputs and set points
- Functions for dehumidifying, set point shift, cascade control
- Password protected programmable user and control parameters

TCI-W23-U also includes

- Power cap protected real-time clock with 48 hr power backup
- 7-day programmable schedules, with options including change of set points and direct position of manual outputs
- Blue backlight

Applications

- Fan coil units
- Heat exchangers
- Zoning
- VAV
- Air handlers
- Fan, pump control
- Humidifiers
- Dehumidifiers
- Ventilation
- Radiant heating
- Radiant cooling
- Pressurization

General

- TCI-W13-U: 1 independent control loop, 1 internal temperature sensor, 1 universal input (analog/binary/temp), 1 binary output, 2 analog outputs
- TCI-W23-U: 2 independent control loops, 1 internal temperature sensor, 1 universal input, 1 passive input, 1 binary output, 2 analog outputs.
- Internal temperature sensor standard. Add replaceable humidity element as required or order -H version: AES3-HT-A2 (2%), AES3-HT-A3 (3%) or AES3-HT-A5 (5%)
- Flexible application configuration is made with a parameter-setting routine using the standard operation terminal

Name

T C I - W 2 3 - U

Housing	Blank = square housing
In/Outputs:	See table below
Control loops:	1 = 1 control loop, 2 = 2 control loops
Mounting:	W = Wall mounted
Series:	**TCI**

Ordering

Model	Stock code	Loop	Temperature input	Humidity input	UI	TI	Binary output	Analog output	Option
TCI-W13-U	40-10 0174	1		0	1	0	1	2	Standard
TCI-W13-U-H	40-10 0175			1					RH sensor 3% acc.
TCI-W23-U	40-10 0176	2		0		1			7-day programmable
TCI-W23-U-H	40-10 0177			1					RH sensor 3% acc.
AES3-HT-A2	40-50 0102			1					RH sensor 2% acc.
AES3-HT-A3	40-50 0103			1					RH sensor 3% acc.
AES3-HT-A5	40-50 0104			1					RH sensor 5% acc.

© Vector Controls GmbH, Switzerland

Technical specifications

Caution! This device is intended to be used for comfort applications. Where a device failure endangers human life and/or property, it is the responsibility of the owner, designer and installer to add additional safety devices to prevent or detect a system failure caused by such a device failure. Vector Controls or its affiliates cannot be held liable for any damage caused by such a failure. Failure to follow specifications and local regulations may endanger life, cause equipment damage and void warranty.

Power supply	Power requirements	24 VAC ±10%, 50/60 Hz, Class 2, 2.0 A, 48 VA max. 24 VDC ±10%
	Power consumption	max. 3 VA
	Electrical connection	Terminal connectors 0.34…2.5 mm² wire (AWG 22…13)
	Clock backup	min. 48 hours
Signal inputs	Universal input Input signal Resolution Impedance	Setting for voltage or current 0…10 V or 0…20 mA 9.76 mV or 0.019 mA (10 bit) Voltage: 98 kΩ Current: 240 Ω
	Universal input Range Accuracy	Input configured to remote temperature (RT) or digital input (DI) NTC (Sxx-Tn10 sensor): -40…140 °C (-40…284 °F) -40…0 °C (-40…32 °F): 0.5 K 0…50 °C (32…122 °F): 0.2 K 50…100 °C (122…212 °F): 0.5 K > 100 °C (> 212 °F): 1 K
	Humidity Sensor AES3-HT-Ax: Range Measuring Accuracy Hysteresis Repeatability Stability	Capacity sensor 0…100 % rH See Figure to the right ± 1% ± 0.1% < 0.5% / year
Signal outputs	Analog output Output signal Resolution Maximum load	 DC 0…10 V / 0…20 mA 9.76 mV / 0.019 mA Voltage: ⩾ 5 kΩ Current: ⩽ 250 Ω
	Relays outputs Type of disconnection AC voltage DC voltage	 Micro-interruption 0…48 VAC, 2(1.2) A max. (Observe local regulation) 0…30 VDC, 2 A max.
	Insulation strength between relays contacts and system electronics	 2000 VAC to EN 60730-1
Environment	Operation Climatic conditions Temperature Humidity	To IEC 721-3-3 class 3K5 0…50 °C (32…122 °F) < 95% RH non-condensing
	Transport & storage Climatic conditions Temperature Humidity Mechanical conditions	To IEC 721-3-2 and IEC 721-3-1 class 3K3 and class 1K3 -25…70 °C (-13…158 °F) < 95% RH non-condensing class 2M2
Standards	Degree of protection	IP30 to EN 60529
	Pollution class	II (EN 60730-1)
	Safety class	III (IEC60536)
	Overvoltage category	I (EN60730-1)
General	Material: Cover, back part Mounting plate	Fire proof ABS plastic (UL94 class V-0) Aluminum
	Dimensions (H x W x D)	Front part: 112 x 73 x 15 mm (4.4” x 2.9” x 0.6”) Power case: ø 58 x 32 mm (ø 2.3” x 1.3”)
	Weight (including package)	TCI-W13-U = 205g (7.2 oz.), TCI-W23-U = 220g (7.8 oz)

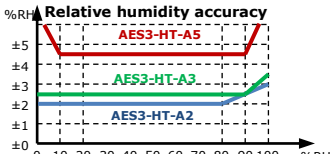

Figure 1: Max RH-tolerance at 25°C (77°F) per sensor type

Product testing and certification

CE Declaration of conformity

Information about the conformity of our products can be found on our website www.vectorcontrols.com on the corresponding product page under "Downloads"

© Vector Controls GmbH, Switzerland

Dimensions, mm (inch) and installation

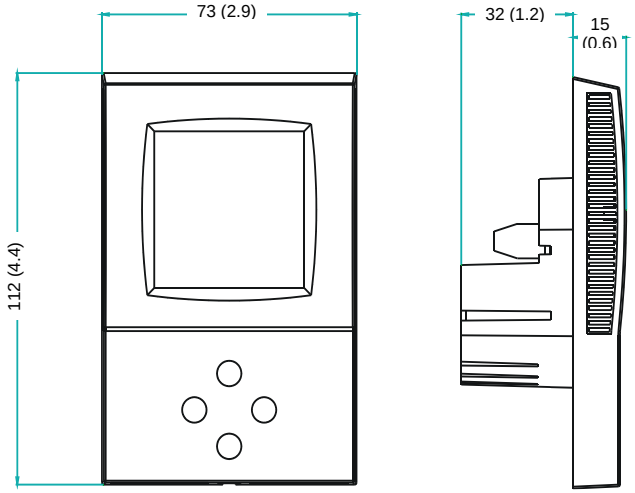

- Install the controller on an easy accessible interior wall, approx. 1.5 m above the floor in an area of average temperature.
- Avoid direct sunlight or other heat sources, e.g. the area above radiators and heat emitting equipment.
- Avoid locations behind doors, outside walls and below or above air discharge grills and diffusers.
- Location of mounting is less critical if external temperature sensors are used.
- Ensure adequate air circulation to dissipate heat generated during operation.
- Observe local regulations.

  Do not mount in a wet or condensation prone environments.

Connection

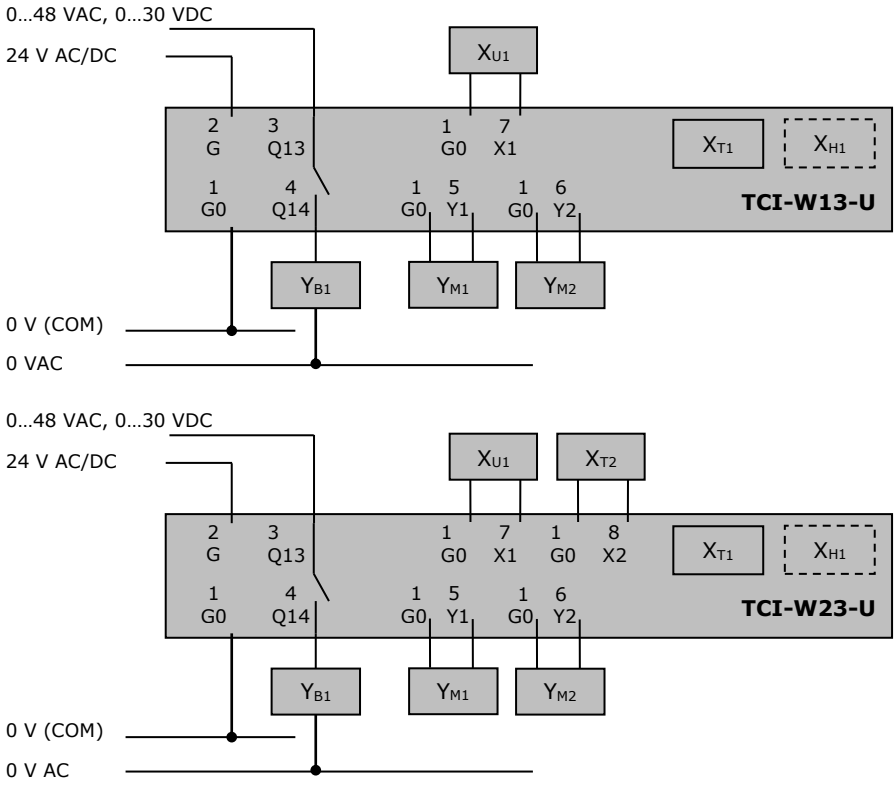

Warning:
Live electrical components!
During installation, testing, servicing and troubleshooting of Vector Controls products, it may be necessary to work with live electrical components. Have a qualified licensed electrician or other individual who has been properly trained in handling live electrical components perform these tasks. Failure to follow all electrical safety precautions when exposed to live electrical components could result in death or serious injury.

Terminal Description

G0	Power supply:	0 V, -24 VDC; common for power supply, analog in- and outputs
G	Power supply:	24 VAC, +24 VDC
X_{U1}	Universal input:	NTC 10 kΩ @ 25 °C (77 °F) or open contact, 0…10 VDC or 0…20 mA (selectable by jumper)
X_{T2}	Passive input:	NTC 10 kΩ @ 25 °C (77 °F) or open contact
Y_{B1}	Binary output:	Potential free relays contacts (see technical specification)
Y_{M1}, X_{M2}	Analog outputs:	0…10 V or 0…20 mA*
X_{T1}	Internal temperature input	
X_{H1}	Internal humidity input if AES3-HT is inserted	

Use copper, twisted pair, conductors only. The operating voltage must comply with the requirements for safety extra-low voltage (SELV) as per EN 60730. Use safety insulating transformers class II with double insulation as per EN 60742; they must be designed for 100% ON-time. When using several transformers in one system, the connection terminal 1 must be galvanic connected. TCI is designed for operation of 24 VAC safety extra-low voltage and is short-circuit-proof. Supplying voltages above 24 VAC to low voltage connections may damage the controller or other devices. Connection to voltages exceeding 42 V endangers personnel safety.

© Vector Controls GmbH, Switzerland

Selection of actuators and sensors

Temperature sensors: Use Vector Controls NTC sensors to achieve maximum accuracy: SDB-Tn10-20 (duct), SRA-Tn10 (room), SDB-Tn10-20 + AMI-S10 as immersion sensor.

Actuators: Choose modulating actuators with an input signal type of 0…10 V DC or 4…20 mA (Min. and max. signal limitations may be set with parameters. 3-pointactuators with constant running time are recommended).

Binary auxiliary devices (e.g. pumps, fans, on/off valves, humidifiers, etc.): Do not directly connect devices that exceed specified limits in technical specifications – observe startup current on inductive loads.

© Vector Controls GmbH, Switzerland

Display and operation

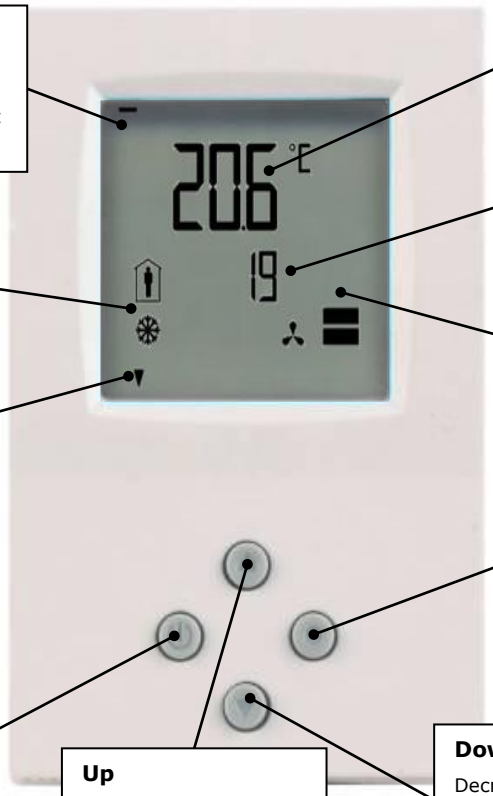

Loop indication
Standard display (no button pressed for 30 sec.): Not visible.
Loop display: Bar at 1 = Loop 1, Bar at 2 = Loop 2

Mode
Display of operation mode

Indicators
Standard display: Active digital output (at 1)
Loop display: Active digital stages (at 8,9,10)

Left (POWER)
Press < 2 sec.: Toggle STANDBY-COMFORT mode or switch from OFF to ON
Press > 2 sec.: Turn unit OFF. Text OFF displayed with current time (deluxe) temperature (standard)
(Parameter setting: ENTER to select menu option, accept parameter change)

Large digits
Display of input or parameter value.

Small digits
Display of setpoint, clock or parameter number.

Vertical bar
(scrolls up/down, 10% resolution)

Right (OPTION)
Press < 2 sec.: Select Control Loop
Press > 2 sec.: Enter set-up CLOCK, SCHEDULES, H/C, °C/°F
(Parameter setting: ENTER to select menu option, accept parameter change)

Up
Increment SET POINT
(Parameter setting: SCROLL menu options and parameters)

Down
Decrement SET POINT
(Parameter setting: SCROLL menu options and parameters)

Operation mode symbols		Control symbols	
	Comfort (occupied): All control functions operating per set points		Heating (reverse) active
	Economy (unoccupied): Set points shifted according to *1L07, 2L07*		Cooling (direct) active
OFF	Energy hold off: Outputs are off, inputs monitored for alarms		Schedule set
			Manual override
		*	Fan active

Standard display (Parameters UP08, UP09, UP10)

- Active when no key has been pressed for 30 seconds
- Contents may be chosen with parameters

Loop display

- Active when changing set points. Large digits show input value. Small digits show set point. Vertical bars show analog output value. Arrows in position 1, 2 and/or 3 show active binary (digital) output stages

Override of secondary set point in cascade control

- If cascade control is active, with variable air volume (VAV) for example, the user can override the primary loop and manually select the set point of the secondary loop - the loop is now changed to constant air volume (CAV). Typically for tuning the VAV system. This feature may be disabled with UP02
- While the secondary loop is displayed change the set point with UP/DOWN. Override cascade symbol appears
- Press OPTION to move back to the temperature loop and cancel cascade override

Power failure

- All parameters and set points are memorized and do not need to be re-entered
- Upon return of power: Set *parameter UP05* to keep the unit off, switch on, or operation mode before power failure
- Clock and time schedule settings retained for 48 hours (after powered for at least 10 hours)

Error messages

Err1: An assigned input is not enabled or missing. All control loops, functions and outputs tied to this input will be disabled. Verify input connections, jumper settings and parameter settings for the input involved
Err3: A function refers to a disabled input. Disable the function or enable the input
Err4: Internal failure. Product must be replaced

© Vector Controls GmbH, Switzerland

Manual heat – cool change

To manually change heating or cooling mode press the OPTION key for more than 2 seconds. Access to manual heat – cool change may be disabled with parameter UP03.

For TCI-W13-U: Press OPTION > 2 s: SEL and H-C is displayed. For TCI-W23-U: Press OPTION > 2 s: SEL and current time is displayed. Press UP key twice: SEL and H-C is displayed. Press OPTION again to toggle H or C.	SEL H-C 

Display input values

For TCI-W13-U: Press OPTION > 2 s: SEL and H-C is displayed. Press UP key once: UI1 and its value are displayed For TCI-W23-U: Press OPTION > 2 s: SEL and current time is shown. Press UP key five times: UI1 and value are displayed. Press UP key again to step through the next active input Note: disabled inputs will not be shown.	75% UI 1

Changing temperature unit °C/°F

For TCI-W13-U: Press OPTION > 2 sec. SEL and H-C is displayed. Press UP key until C–F is displayed Press OPTION to toggle °C or °F unit For TCI-W23-U: Press OPTION > 2 sec. SEL and current time is shown. Press UP key until C–F is displayed Press OPTION to toggle °C or °F unit Press LEFT to exit	SEL C-F °C

© Vector Controls GmbH, Switzerland

Clock operation and time schedules

TCI-W23-U contains a quartz clock with battery back-up (not available in TCI-W13-U). Up to 8 mode changes based on time and day of the week may be programmed. Also position an output or select a set point directly with a time schedule. A blinking clock indicates that the time has not been set or that the unit has been without power for longer than 48 hours. The time needs to be set to allow time schedules to operate.

Clock setup

Press OPTION > 2 s:SEL and current time displayed Press OPTION < 2 s to change time, Minutes blink: UP/DOWN to change, OPTION to save minutes, Hours blink: UP/DOWN to change, OPTION to save hour, Press OPTION to save time, DAY1 blinks: UP/DOWN to change, OPTION to save day	SEL 00:00 DAY1 (Mon)

Enable/disable time schedules

Press OPTION > 2 s: SEL and current time displayed Press UP: SEL and PRO displayed, clock symbol blinks Press OPTION: Time schedule status displayed OFF or ON: Press OPTION OFF/ ON blinks, UP/DOWN to change, OPTION to save	SEL PRO 	Pro OFF/ON

Creating time schedules

Step 1: Select a switching time (Up to 8, Pr01…Pr08)

Press UP while PRO-ON displayed: Large digits display Pr01, small digits display 00:00 Press OPTION: 00:00 blinks Press UP/DOWN to select Pr01 switching time from 00:00…23:45 Press OPTION to save switching time (bar appears indicating step 1 complete): DAY 1 blinks	Pr01 08:00

Step 2: Apply selected switching time (Pr01) to DAY1 (Mon) – DAY 7 (Sun)

While Pr01 is displayed and DAY1 is blinking: Press UP: Activate Pr01 switching time for DAY1 (triangle appears on 1), Press DOWN: Deactivate Pr01 switching time for DAY1 (triangle disappears) Press OPTION to save Pr01 DAY1 (2nd bar indicates step 2 complete): Repeat for DAY2...DAY7	Pr01 DAY1  ▼ 1 2 3 4 5 6 7

Step 3: Select action for switching time (Pr01+Days)

After Pro1, DAY1…DAY7 is completed (Pro1 switching time activate or deactivate on desired days), press OPTION again to come to desired action for Pro1. The following options appear in order: No = switching time not active OP = operation mode (select ON (Comfort/Occupied), ECO (Economy/Unoccupied), OFF) L1 = set point of loop 1 (select set point) L2 = set point of loop 2 (select set point) d1 = ON/OFF status of do1 (output must be in manual mode) d2 = ON/OFF status of do2 (output must be in manual mode) A1 = set point (0…100%) of ao1 (output must be in manual mode) After repeatedly pressing OPTION through DAY7: First available action No appears, blinking: Press UP/DOWN to scroll through the 8 possible actions (3nd bar indicates step 3 complete)	Pr01 no 

Step 4: Complete switching event (e.g. Pro1 = 08:00, DAY 1, Comfort mode)

Available actions blink as you scroll through them, Press OPTION to select one: Characteristics of action (e.g. 0…100% for A1) appear (4th bar indicates step 4 complete) Press UP/DOWN to select, OPTION to complete	Pr01 08:00 

© Vector Controls GmbH, Switzerland

Smart Sensors and Controls Made Easy!

Quality - Innovation – Partnership

Vector Controls GmbH
Switzerland

info@vectorcontrols.com
www.vectorcontrols.com/

© Vector Controls GmbH, Switzerland