# TLC3-FCR-M-U
# Programmable PID Fan Coil Controller

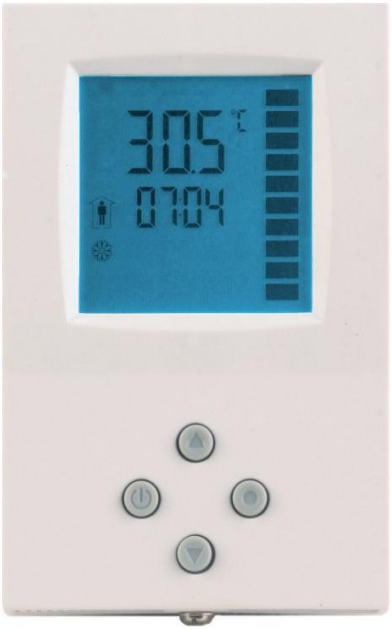

## Features

- Proven PID control algorithm reduces room temperature fluctuations and energy consumption
- Temperature control for 2- and 4-pipe fan coil systems: modulating heating, cooling or fan only
- Automatic or manual control of 3-speed fans
- Economy mode and setpoint limits for energy saving
- Password-protected user and control parameters
- Low power consumption < 1 W, display in °C or °F
- Deluxe version: clock with time schedules, blue backlight, infrared remote control option

## Applications

- Fan coil units in 2- or 4-pipe systems, radiators and chilled ceilings
- Constant or variable air volume systems with 3-stage fans
- Individual room control in hotel rooms, meeting rooms and offices
- PID control of up to 2 modulating valves (0–10 V) for heating and cooling

## General Description

The TLC3-FCR-M-U is a stand-alone electronic fan coil controller with one control loop. The TLC3-FCR-M2-U is designed for 2-pipe systems: 1 internal NTC temperature sensor, 1 external passive input for temperature or a potential-free contact, 3 relay outputs for the fan speeds and 1 analog output (0–10 V). The TLC3-FCR-M4-U is designed for 4-pipe systems: 1 internal NTC temperature sensor, 3 relay outputs and 2 analog outputs (0–10 V) for heating and cooling. It is configured with the standard operation terminal; no special tools or software are required.

## Ordering

| Item Name | Item code | Variant | Power | Features |
|---|---|---|---|---|
| TLC3-FCR-M2-U-24 | 40-10 0141 | Standard | 24VAC/DC | Fan coil controller with:<br>1 TI int, 1 external input<br>3 DO (Relay) Fan control<br>1 AO (0-10VDC) PID valve control |
| TLC3-FCR-M2-U-120 | 40-10 0151 | | 120VAC | |
| TLC3-FCR-M2-U-D-24 | 40-10 0146 | Deluxe | 24VAC/DC | |
| TLC3-FCR-M2-U-D-120 | 40-10 0156 | | 120VAC | |
| TLC3-FCR-M4-U-24 | 40-10 0142 | Standard | 24VAC/DC | 1 TI int<br>3 DO (Relay) Fan control<br>2 AO (0-10VDC) PID valve control |
| TLC3-FCR-M4-U-120 | 40-10 0152 | | 120VAC | |
| TLC3-FCR-M4-U-D-24 | 40-10 0147 | Deluxe | 24VAC/DC | |
| TLC3-FCR-M4-U-D-120 | 40-10 0157 | | 120VAC | |


© Vector Controls LLC, USA
www.vectorcontrols.com

## Wiring Diagram

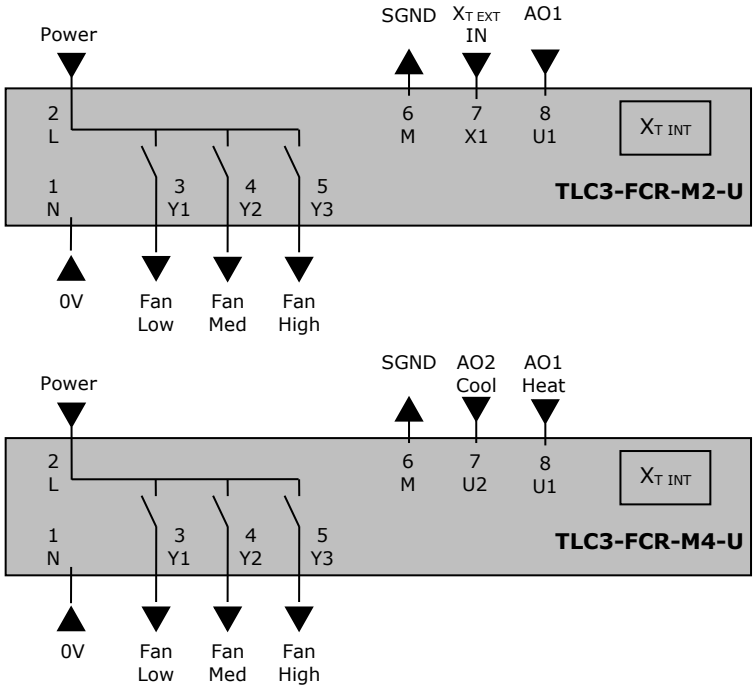


## Description

| | | |
|---|---|---|
| **N** | Power supply: | 0V Neutral |
| **L** | Power supply: | -24: 24VAC/DC, -120: 120VAC, |
| **Y1** | Binary output: | Fan speed low |
| **Y2** | Binary output: | Fan speed medium |
| **Y3** | Binary output: | Fan speed high |

**TLC3-FCR-M2-U:**

| | | |
|---|---|---|
| **M** | Signal common: | Common 0 potential for inputs and analog outputs. |
| **X1** | External input: | NTC 10kΩ @ 25°C (77°F) or open contact to SGND |
| **U1** | Analog output: | 0…10 V DC |

**TLC3-FCR-M4-U:**

| | | |
|---|---|---|
| **M** | Signal common: | Common 0 potential for inputs and analog outputs. |
| **U2** | Analog cooling output: | 0…10 V DC |
| **U1** | Analog heating output: | 0…10 V DC |

### Selection of fans

Do not directly connect devices that exceed 2A. Observe startup current on inductive loads! Do not connect more than one fan coil unit to one controller.

### Modulating Actuators:

Choose actuators with an input signal type of 0-10V DC or 2-10V DC. Observe maximal signal current of 1mA!

## Mounting and installation

Mount the controller on an interior wall, approx. 1.5 m above the floor, in a place with average room temperature. Avoid direct sunlight, heat sources, doors, outside walls and air outlets. The location is less critical if an external temperature sensor is used.

Mount and connect the controller as shown in the installation sheet supplied with the device, and wire it according to the wiring diagram on page 2.


© Vector Controls LLC, USA
www.vectorcontrols.com

# Technical Specification

**Caution!** This device is intended to be used for comfort applications. Where a device failure endangers human life and/or property, it is the responsibility of the owner, designer and installer to add additional safety devices to prevent or detect a system failure caused by such a device failure. Vector Controls or its affiliates cannot be held liable for any damage caused by such a failure. Failure to follow specifications and local regulations may endanger life, cause equipment damage and void warranty.

| | | | | |
|---|---|---|---|---|
| Power Supply | Operating Voltage | | -24 | -120 |
| | AC voltage: 50/60Hz | | 22-26V AC/DC | 100-130 VAC |
| | Power Consumption | | Max 1W, 1.5 VA | |
| | Electrical Connection | | Terminal Connectors | |
| | Deluxe type only: Power backup for real time clock | | Min 48h if charged for 24h | |
| Signal Inputs | Temperature Inputs<br>Range<br>Accuracy | | RT Internal, External (Sxx-Tn10 sensor)<br>0…50 °C (32…122 °F)<br>0.5°C (1°F) | |
| Signal Outputs | Digital Switching Outputs<br>Switching Type<br>AC Switching power<br>Insulation strength<br>between relays contacts and system electronics:<br>between neighboring relays contacts | | DO1 to DO3<br>Relays<br>2A max. each output<br>For -120 type:<br>3750V AC to EN 60 730-1<br>1250V AC to EN 60 730-1 | |
| | Analog Outputs<br>Output Signal<br>Minimum impedance / Max load | | AO1, For TLC3-FCR-M4 AO2<br>DC 0…10 V<br>10kOhm, 1mA. | |
| Environment | Operation<br>Climatic Conditions<br>Temperature<br>Humidity | | To IEC 721-3-3<br>class 3 K5<br>0°C …50°C (32°F…122°F)<br><95% R.H. non-condensing | |
| | Transport & Storage<br>Climatic Conditions<br>Temperature<br>Humidity<br>Mechanical Conditions | | To IEC 721-3-2 and IEC 721-3-1<br>class 3 K3 and class 1 K3<br>-25°C…70°C (-13°F…158°F)<br><95% R.H. non-condensing<br>class 2M2 | |
| Standards | CE conformity<br>EMC Directive<br>Low Voltage Directive | | <br>2004/108/EC<br>2006/95/EC | |
| | Product standards<br>Automatic electrical controls for household and similar use<br>Special requirement on temperature dependent controls | | <br>EN 60 730–1<br>EN 60 730–2–9 | |
| | Electromagnetic compatibility for domestic sector | | Emissions: EN 60 730-1<br>Immunity: EN 60 730-1 | |
| | Degree of Protection | | IP30 to EN 60 529 | |
| | Pollution Class | | II (EN 60 730-1) | |
| | Safety Class: | for -24 types | III (IEC 60 536) | |
| | Overvoltage Category: | for -24 types | I (EN 60 730-1) | |
| General | Dimensions (H x W x D) | Front part:<br>Power case: | 16 x 73 x 113mm (0,7 x 2.9 x 4.5 in.)<br>60 x 50 x 32mm (2.4 x 2.0 x 1.3 in.) | |
| | Material: | Cover, back part<br>Mounting Plate | ABS plastic (UL94 class V-0)<br>Galvanized Steel | |
| | Weight (including package) | for -24 types<br>for -120 types | standard: 270g (9.5oz), deluxe: 275g (9.7oz)<br>standard: 295g (10.5oz), deluxe: 305g (10.8oz) | |


© Vector Controls LLC, USA
www.vectorcontrols.com

## Dimensions

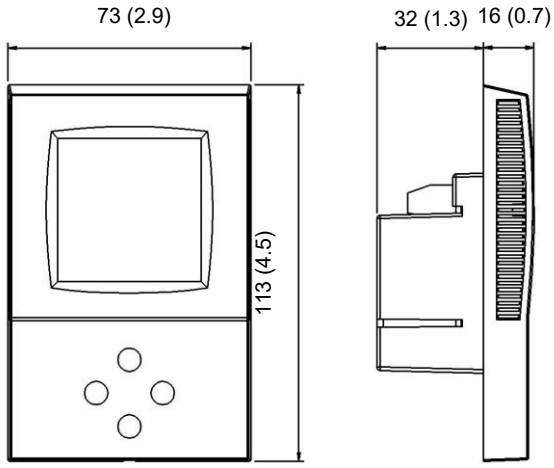


Space required in flush mounting box:
(H x W x D)
60 x 50 x 32mm (2.4 x 2.0 x 1.3 in.)

Distance for mounting screws:

Horizontal 55 to 60mm (2.2 to 2.4 in.)
Vertical: 55 to 93mm (2.2 to 3.7 in.)


© Vector Controls LLC, USA
www.vectorcontrols.com