Thermostat for elevator shafts ventilation TOA-T101 and TOA-T102

Overview



The TOA is an electronic thermostat (temperature monitor) preconfigured for elevator shaft ventilation with for 230 VAC or 24 V AC/DC spring return actuators.

If the measured temperature exceeds the temperature limit, the thermostat switches off its output. If the temperature returns to within the allowed limit, the output is switched back on.

The thermostat can work for heating or cooling applications.

The TOA is delivered with a maximum temperature limit of 35°C (95 °F) and an allowed limit of 30 °C (86 °F)

The thermostat is preconfigured for elevator shaft ventilation but can also be used for heating or cooling applications.

It can be adjusted by the user with the OPA-S operating terminal if required.

Features

- TOA-T101:
  230 VAC or 24 V AC/DC power supply
  24 V output
- TOA-T102:
  230 VAC power supply
  230 VAC output
- Adjustable switch on and off temperature limits.
  -20…100 °C (-4…212 °F) adjustment range
- 0.5 °C (1 °F) measuring accuracy
- Signal LED indicates operating status of Thermostat
- Temperature can be measured at the device or remotely
- Easy programming of settings with external control unit
- Quick copying of predefined settings using a memory device

Applications

- Ventilation damper control for elevator shafts.
  Control of damper for temperature control in an elevator shaft by opening or closing the motorized dampers (with spring return). Turning the contact off opens the damper, turning the contact on closes the damper.
- Frost protection
  Activating a heating device if temperature gets close to freezing.

Examples

Elevator shaft ventilation with TOA-T101:

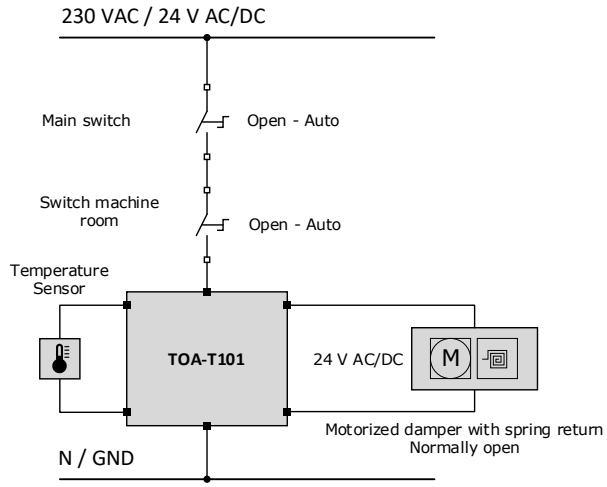

Elevator shaft ventilation with TOA-T102:

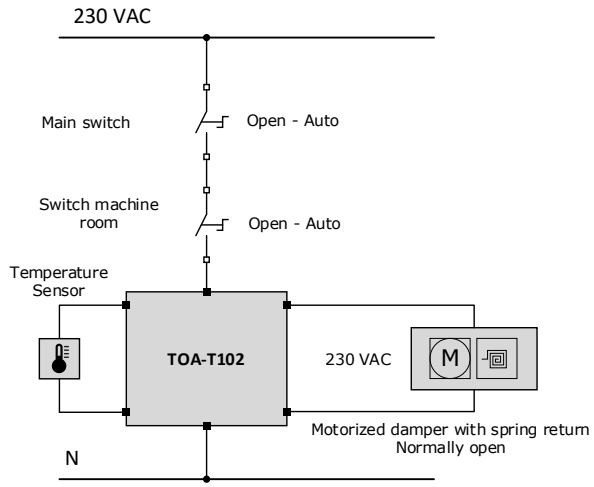

Product Testing and Certification

CE Declaration of Conformity

Information on the conformity of our products can be found on our website www.vectorcontrols.com on the corresponding product page under "Downloads".

© Vector Controls GmbH, Switzerland
www.vectorcontrols.com

Types and Ordering

Product Name	Product No.	Description / Configuration	Option
Thermostat			
TOA-T101	40-100242	230 VAC or 24V AC/DC power supply for 24 V actuators Without temperature sensor	For 24 V actuators without sensor
TOA-T101-S5	40-100295	230 VAC or 24V AC/DC power supply for 24 V actuators Including temperature sensor S-Tn10-005-A	For 24 V actuators with sensor
TOA-T102	40-100243	230 VAC power supply, for 230 VAC actuators Without temperature sensor	For 230 V actuators without sensor
TOA-T102-S5	40-100296	230 VAC power supply for 230 V actuators including temperature sensor S-Tn10-005-A	For 230 V actuators with sensor.
Temperature sensor if not included must be ordered separately:			
S-Tn10-005-A	40-200210	Temperature sensor for measuring at the thermostat	5 cm, PVC-cable
SOD-Tn10-1	40-200211	Temperature sensor for remote mounting	1 m, PVC-cable
Accessories			
OPA-S	40-500006	External operation terminal with LCD display	
AEC-PM2	40-500130	Memory device for easy copying of settings	

Technical Specifications

Caution! This device is intended to be used for comfort applications. Where a device failure endangers human life and/or property, it is the responsibility of the owner, designer and installer to add additional safety devices to prevent or detect a system failure caused by such a device failure. Vector Controls or its affiliates cannot be held liable for any damage caused by such a failure. Failure to follow specifications and local regulations may endanger life, cause equipment damage and void warranty.

Power supply	Input voltage:	TOA-T101: 24 V	24 VAC, ± 10 %, 50/60 Hz 24 VDC, 15…34 VDC Power consumption without Actuator: 2 VA Safety extra low voltage (SELV): HD 384, Class II
		TOA-T101: 230 V TOA-T102	230 VAC, ± 10 %, 50/60 Hz
	Electrical connection		Screw terminals, cable 2x 0.34…2.5mm² (AWG 22…14)
Outputs	Switching logic		Relay, normally closed
	Output voltage:	TOA-T101: 24 V TOA-T101: 230 V	If powered with 24 V AC/DC: 24 V AC/DC If powered with 230 VAC: 24 VAC
		TOA-T102	230 VAC
	Output power:	TOA-T101: 24 V TOA-T101: 230 V	If powered with 24 V AC/DC: according to power supply If powered with 230 VAC: max 400 VA
		TOA-T102	Max. 400 VA
	Relay output: SPST (NO)		2 A Full load current
	Insulation strength		4000 VAC between relays and system electronics 1000 VAC between neighboring contacts
	Electrical connection		Screw terminal, cable 2x 0.34…2.5mm² (AWG 22…14)
Inputs	Type		External temperature sensor: Sxx-Tn10 (NTC 10kΩ@25°C)
	Range		-20…100 °C (-4…212 °F)
	Accuracy		0.5°C at 0…50 °C (32…122 °F) 1.0°C at -20…0 °C (-4…32 °F) / 50…100 °C (122…212 °F)
Environment	Operation Climatic conditions Temperature Humidity		To IEC 721-3-3 Class 3K5 0…50 °C (32…122 °F) < 95 % RH non-condensing
	Transport & storage Climatic conditions Temperature Humidity Mechanical conditions		To IEC 721-3-2 and IEC 721-3-1 Class 3K3 und class 1K3 -25…70 °C (-13…158 °F) < 95 % RH non-condensing Class 2MT2

© Vector Controls GmbH, Switzerland
www.vectorcontrols.com

Technical specification (continued)

Standards	Degree of protection	IP40 (EN 60529)
	Overvoltage category	III (EN 60730-1)
	Safety class	II (IEC 60536)
	Environmental class	II (EN 60730-1)
General	Material	PC+ABS plastic
	Dimensions (L x W x H)	160 x 75 x 55 mm (6.3 x 3.0 x 2.2 inch)
	Weight (including package): TOA-T101	465 g (16.40 oz)
	TOA-T102	305 g (10.76 oz)

Dimensions, mm (inch)

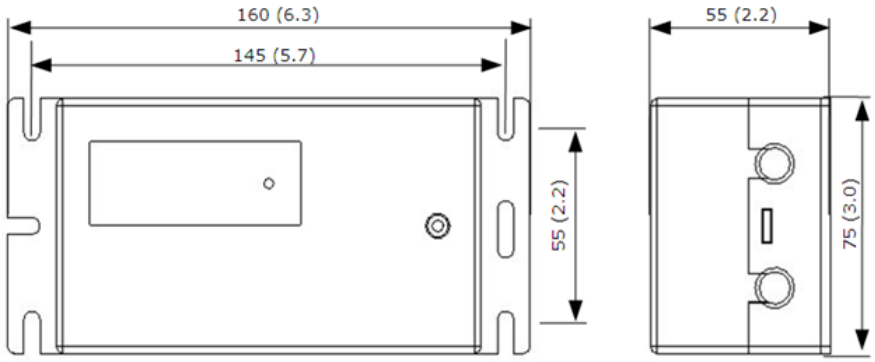

Wiring and Connection TOA-T101

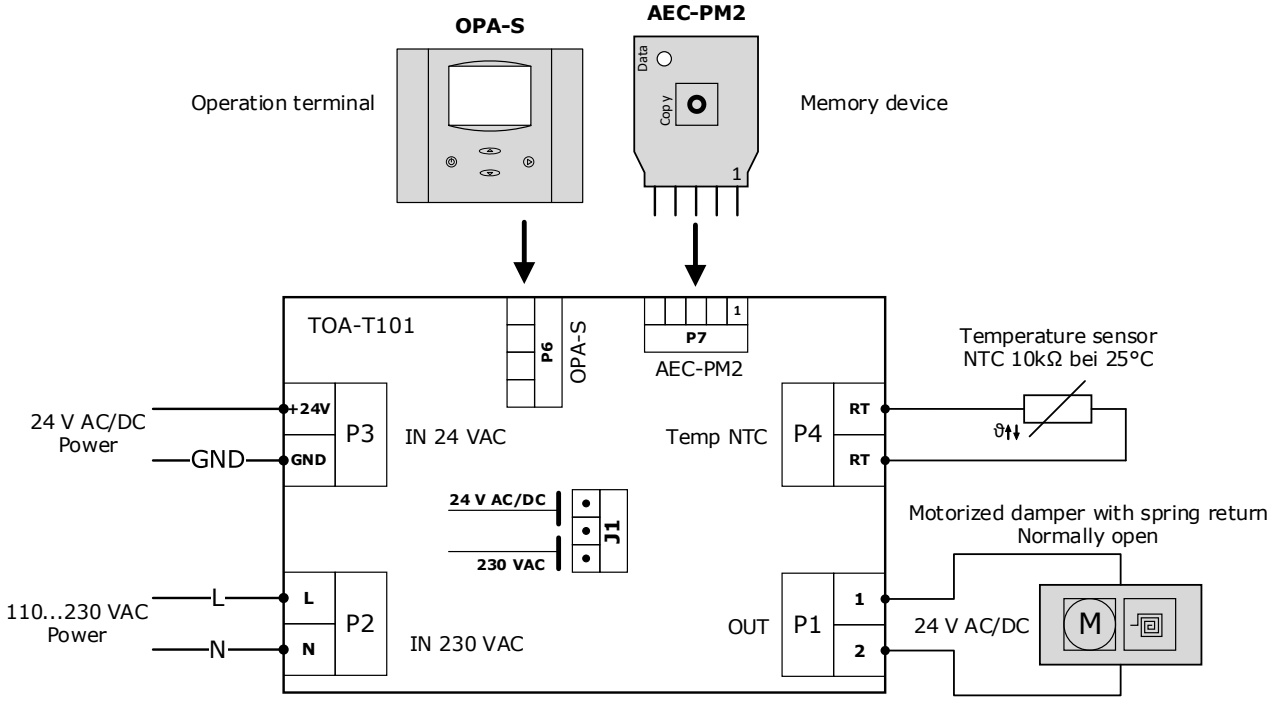

Important
The power supply for the TOA-T101 is either 24 V AC/DC or 230 VAC!
The jumper J1 **must** be set according to the supply voltage!

© Vector Controls GmbH, Switzerland
www.vectorcontrols.com

Wiring and Connection TOA-T102

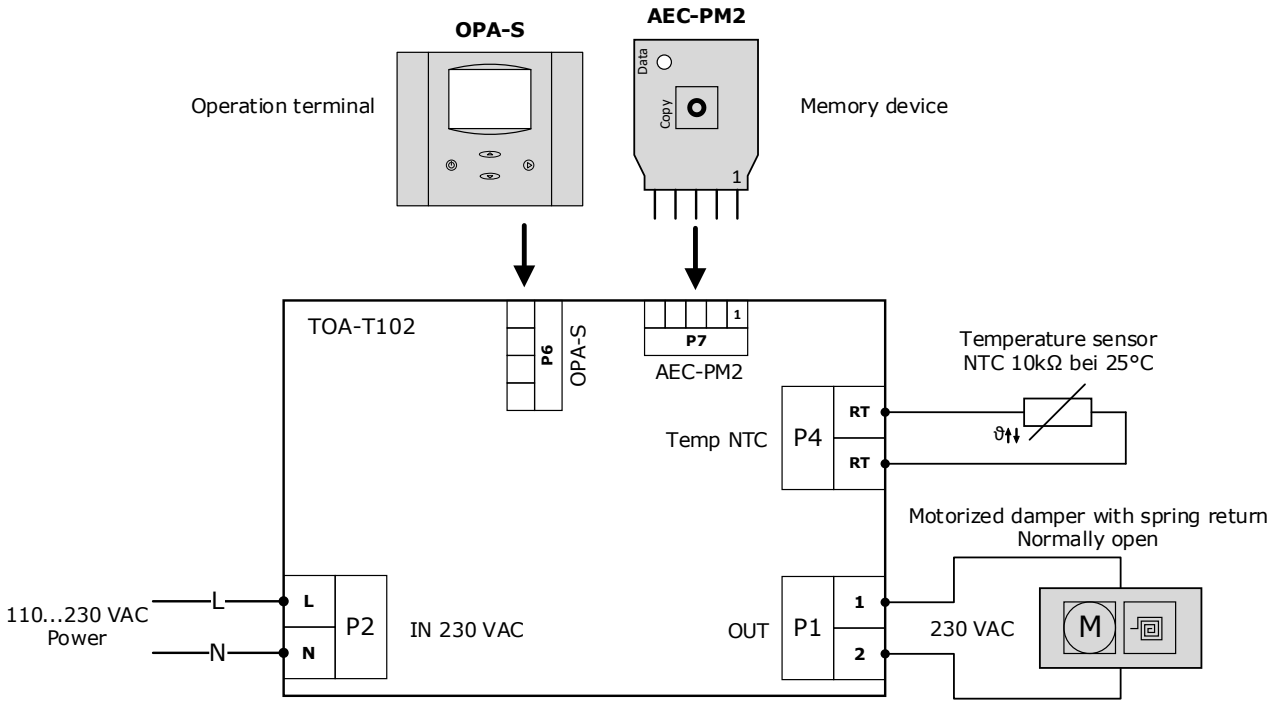

Temperature sensor selection

Use Vector Controls NTC temperature sensors to achieve maximum monitoring accuracy.
Different cable lengths simplify the installation of the temperature sensor:

- For temperature measurements at the TOA, use the probe with short cable (5 cm).
- For remote temperature measurements, use the probe with long cable (1 m).

For more information, see "Ordering Information" on page 2.

Important
The temperature sensor must not be exposed to direct sunlight!

Mounting and installation

Mount the thermostat in a dry place. Mount and connect it as shown in the installation sheet supplied with the device and wire it according to the wiring diagram above. TOA-T101: set jumper J1 according to the supply voltage.
After power-up the signal LED lights up green. To check the function, disconnect the temperature sensor: the signal LED flashes red and the output switches off. Reconnect the sensor afterwards.

© Vector Controls GmbH, Switzerland
www.vectorcontrols.com