TLR-D5P with OPU-D5P, Heat pump & package unit controller
Cabinet mounted base, wall mounted operation terminal

Features



- Temperature control for 2-pipe or 4-pipe package units or heat pumps (fan supported dual heating or cooling stages with reversing valve)
- Temperature control for 2-pipe package units or heat pumps (fan supported dual heating or cooling stages) with optional electric re-heat
- Temperature control for 4-pipe package units (fan supported heating and cooling 1. stage + optional 2 stage heating or cooling)
- Relays switching up to 10(6) A
- Control for heating, cooling and fan only operation
- Adjustable start and stop delays to protect compressors and switching elements
- Cost saving option with economy functionality and set point limitations
- For large rooms: Master – Slave option: One terminal may drive up to 8 base units in parallel
- External sensor or potential-free contact for remote control, external heat/cool changeover, or automatic changeover based on supply or outdoor temperature with selectable activation limits
- Password protected programmable user and control parameters
- Temperature display in Fahrenheit

Deluxe Version:

- Clock and time schedule functions with special options for schools and universities
- Clock keeps running for 48 h in case of power failure
- Display with blue backlight
- Infrared remote controller option:
  With special features for Boost and delayed switching on or off

Applications

- Air only systems: fan supported heating and/or cooling stages e.g. compressors, electric heaters.
- Air/water systems: Induction units, fan supported dual coil units for 2- and 4-pipe systems.

General description

The TLR-D5P is a stand-alone electronic package unit controller with one control loop. The TLR-D5P includes one internal NTC temperature sensor, one open/contact or external NTC temperature input and five binary outputs (relays).
A detailed adaptation to local conditions is possible with the use of a simple configuration routine. The TLR-D5P can be configured using the standard operation terminal. No special tools or software is required.
The TLR-D5P has been specifically developed to switch larger loads with switching power of up to 10(6) A for each binary output.

Ordering

A working controller consists of one operation terminal and at least one base unit.

Item name	Item code	Function	Type	Key-data
TLR-D5P-24	40-11 0013	24 VAC	Base unit	Fan coil controller with:
OPU-D5P	40-10 0095	Standard	Operation terminal	1 TI int or ext. 1 DO (Relay) Fan control 4 DO (Relay) Binary control
OPU-D5P-D	40-10 0096	Deluxe		

Parameter preset

-W01	40-10 00xx-01	Cooling only	Add –Wx at the end of the item name or –x at the end of item code to order pre-configured model

Accessories

OPR-1	40-50 0001	2xAAA bat	Infrared remote controller
S-Tn10-2	40-20 0001	Flying lead sensor with 6 ft. (2 m) cable
SD-Tn10-12-2	40-20 0002	Flying lead duct sensor 4.7” (12 cm) immersion depth, 6 ft. (2 m) cable
SD-Tn10-20-2	40-20 0003	Flying lead duct sensor 7.8” (20 cm) immersion depth, 6 ft. (2 m) cable
SDB-Tn10-12	40-20 0051	Duct sensor with housing, 4.7” (12 cm) immersion depth
SDB-Tn10-20	40-20 0004	Duct sensor with housing, 7.8” (20 cm) immersion depth
SRA-Tn10	40-20 0005	Room sensor
SOD-Tn10	40-20 0059	Outdoor sensor

© Vector Controls LLC, USA
www.vectorcontrols.com

Technical specifications

Caution! This device is intended to be used for comfort applications. Where a device failure endangers human life and/or property, it is the responsibility of the owner, designer and installer to add additional safety devices to prevent or detect a system failure caused by such a device failure. Vector Controls or its affiliates cannot be held liable for any damage caused by such a failure. Failure to follow specifications and local regulations may endanger life, cause equipment damage and void warranty.

Power supply	Operating voltage	TLR-D5P-24	24V AC/DC ± 10 %, 50/60 Hz, SELV to HD 384, Class II, 48 VA max
	Power consumption	TLR-D5P-24	Max. 3 VA
	Electrical connection	Terminal connectors	Wire 0.34…2.5 mm^2 (AWG 22…13)
	Deluxe type only: Power backup for real time clock		Min 48 h if charged for 24 h
Signal inputs	Temperature input	Range Accuracy	0…50 °C (32…122 °F) 0.5 °C, 1 °F
Signal outputs	Digital switching outputs Switching type AC Switching power Insulation strength between relays contacts and system electronics: between neighboring relays contacts between relay groups:		DO1 to DO5 Relays 0…240 VAC 10(6) A max. each output 3750 VAC to EN 60730-1 1250 VAC to EN 60730-1 1<>2<>3, 4<>5 3750 VAC to EN 60730-1 1/2/3<>4/5
Communication Base - Terminal	Communication type Cable type:		Digital: peer to peer Copper wire 0.8…2.5 mm^2 (AWG18…13), shielded twisted pair
Environment	Operation Climatic conditions Temperature Humidity		To IEC 721-3-3 class 3K5 0…50 °C (32…122 °F) < 95% RH non-condensing
	Transport & storage Climatic conditions Temperature Humidity Mechanical conditions		To IEC 721-3-2 and IEC 721-3-1 class 3K3 and class 1K3 -25…70 °C (-13…158 °F) < 95% RH non-condensing class 2M2
Standards	CE conformity EMC directive Low voltage directive		 2004/108/EC 2006/95/EC
	Product standards Automatic electrical controls for household and similar use Special requirement on temperature dependent controls		 EN 60730-1 EN 60730-2-9
	Electromagnetic compatibility for domestic sector		Emissions: EN 60730-1 Immunity: EN 60730-1
General terminal	Safety class		III (IEC 60536)
	Degree of protection		IP30 to EN 60529
	Material	Cover, back part Mounting plate	ABS plastic (UL94 class V-0) Galvanized steel
	Color		White RAL 9003
	Dimensions (H x W x D)		112 x 73 x 18 mm (4.4 x 2.9 x 0.8 in)
	Weight including package	OPU-D5P OPU-D5P-D	180 g (6.3 oz) 190 g (6.7 oz)
General base	Safety class		II (IEC 60536)
	Degree of protection		IP20 to EN 60529
	Housing material		PC+ABS plastic (UL94 class V-0)
	Color		Gray (RAL 7001 / 7035)
	Dimensions (H x W x D)		57 x 147 x 115 mm (2.25 x 5.8 x 4.5 in)
	Weight including package	TLR-D5P-24	345 g (12.2 oz)

© Vector Controls LLC, USA
www.vectorcontrols.com

Dimensions [mm] (inch)

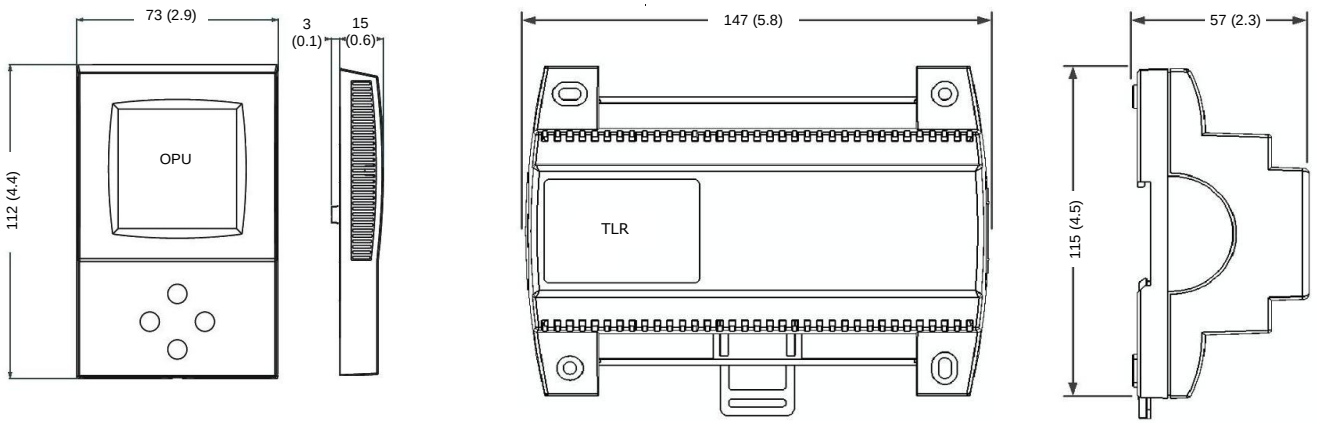

Schematics

Power supply

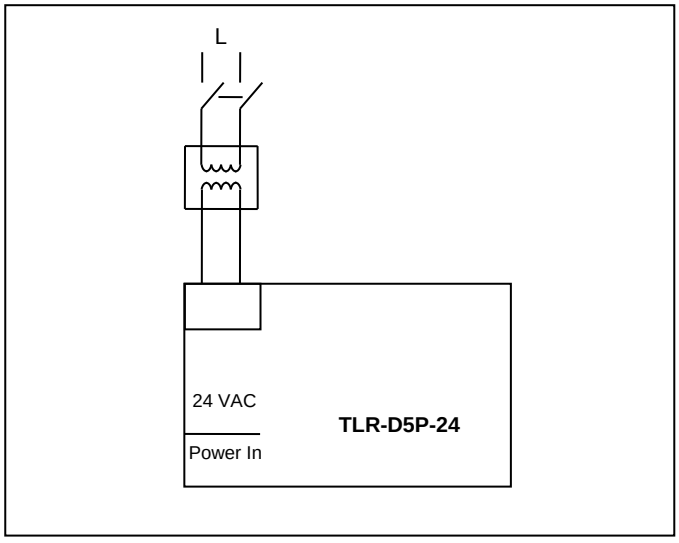

Inputs and operation terminal

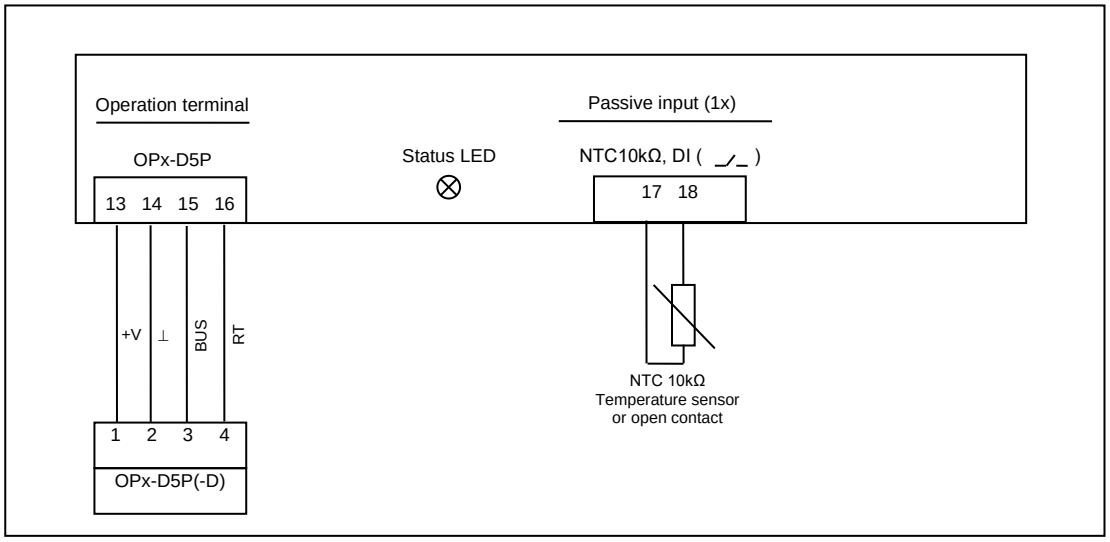

© Vector Controls LLC, USA
www.vectorcontrols.com

Outputs

CP11 = 0, Cooling only

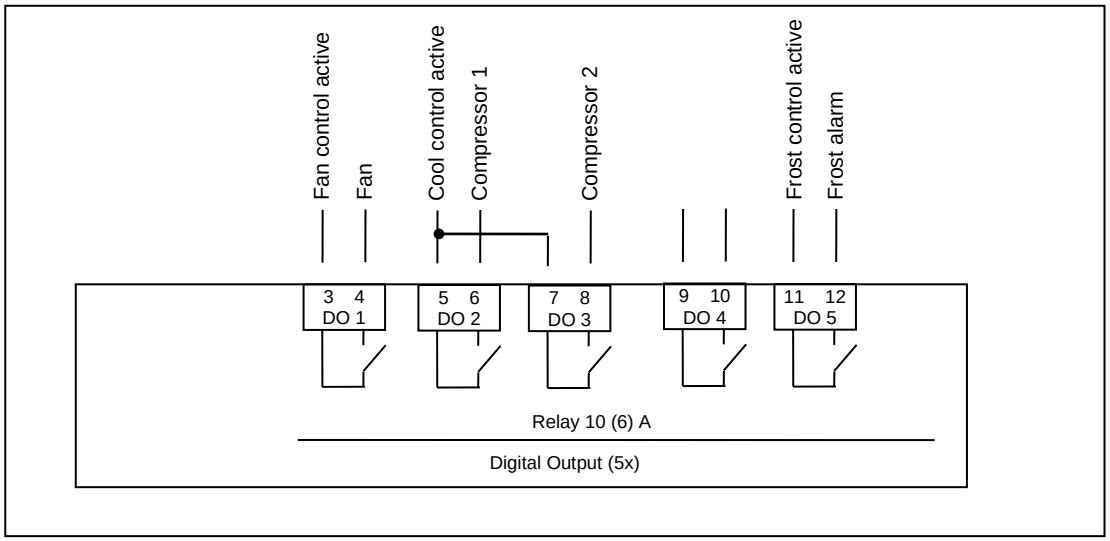

CP11 = 1, Heating only

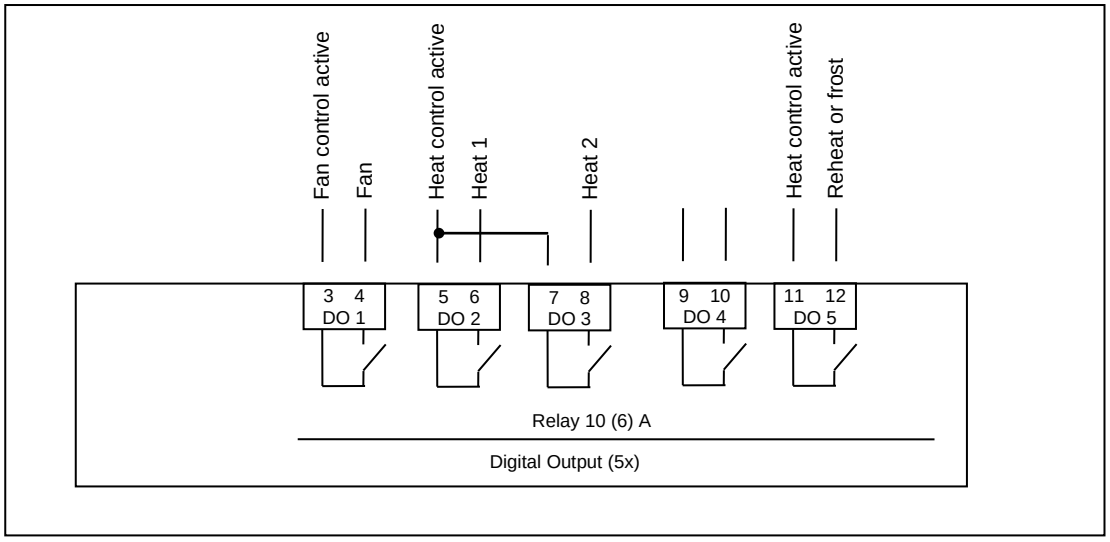

© Vector Controls LLC, USA
www.vectorcontrols.com

CP11 = 2, 2-pipe

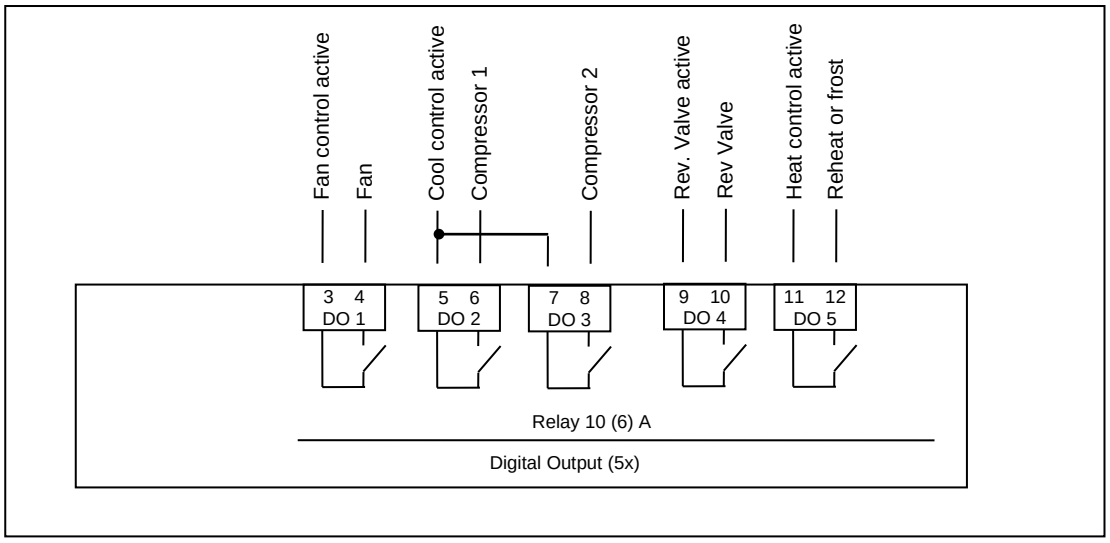

© Vector Controls LLC, USA
www.vectorcontrols.com

CP11 = 3, 4-pipe

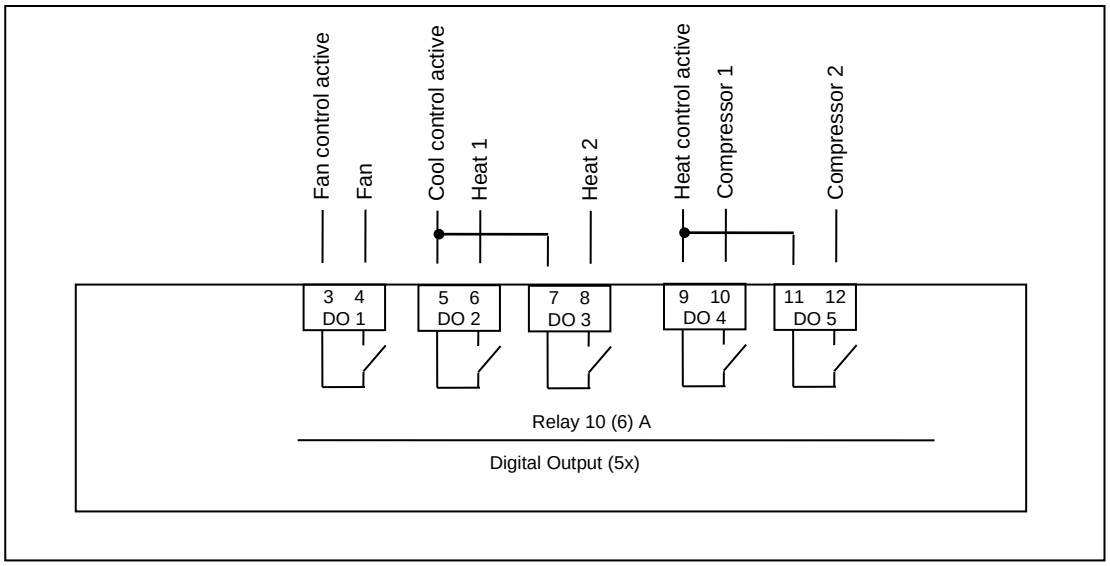

Wiring Diagram

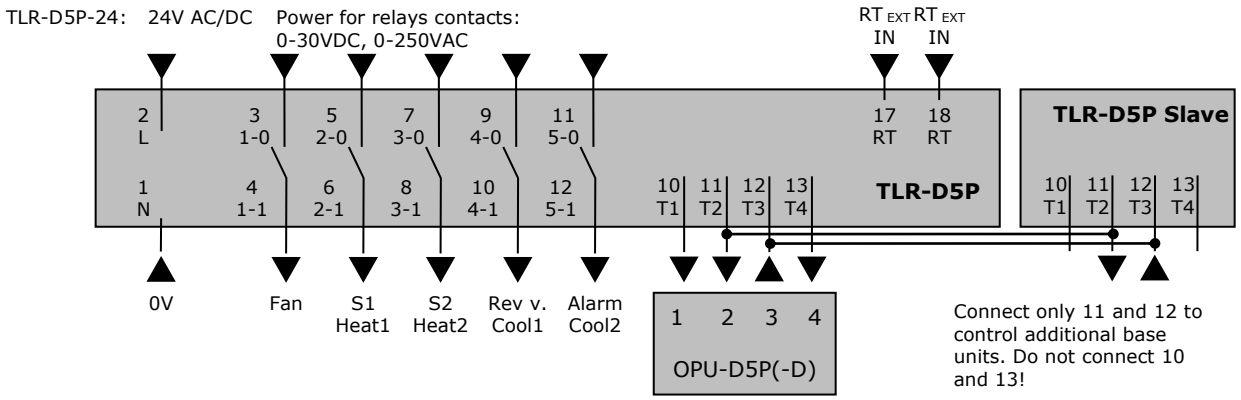

Description:

1	**N**	Power supply:	TLR-D5P-24: 0V AC, 0V DC	
2	**L**	Power supply:	TLR-D5P-24: 24V AC, 24V DC	
3	**1-0**	Switched common for fan:	0-250VAC, 0-30VDC	
4	**1-1**	Binary output:	Fan	
5	**1-2**	Binary output:	2-pipe: Stage 1 heat/cool,	4-pipe: Heating stage 1
6	**1-3**	Binary output:	2-pipe: Stage 2 heat/cool,	4-pipe: Heating stage 2
7	**2-0**	Switched common for valve:	0-250VAC, 0-30VDC	
8	**2-1**	Binary output:	2-pipe: Reversing valve	4-pipe: Cooling stage 1
9	**2-2**	Binary output:	2-pipe: Alarm	4-pipe: Cooling stage 2
10	**Term1**	Terminal connection 1	Connect to operation terminal	
11	**Term2**	Terminal connection 2	Connect to operation terminal	
12	**Term3**	Terminal connection 3	Connect to operation terminal	
13	**Term4**	Terminal connection 4	Connect to operation terminal	
14	**RT**	External temperature input:	Sxx-Tn10 or open contact	
15	**RT**	External temperature input:	Sxx-Tn10 or open contact	

© Vector Controls LLC, USA
www.vectorcontrols.com

Installation base

The housing of the TLR base unit is a robust plastic enclosure. The controller may be mounted in any orientation by surface mounting on a wall or in a cabinet. 4 mounting-holes for screws up to 4 mm diameter are provided. Mounting onto a standard 35 mm DIN rail is also possible.
When mounting note the following:

- The controller should not be freely accessible after mounting. A protective housing should be used, if mounted outside an electrical cabinet.
- ***Ensure adequate air circulation to dissipate heat generated during operation***.
- Local installation regulations must be observed.

Installation terminal

1. Install the mounting plate straight to the wall or the flush mounting box. Make sure that the nipple with the front holding screw is facing down. Make sure the screw heads do not stand out more than 5 mm of the surface of the mounting plate.
2. Connect the wires of the terminals to the communication wires according wiring diagram
3. Slide the two latches located on the top of the front part into the hooks of the mounting plate.
4. Lower the front part until located flat on the wall and the mounting plate is not visible anymore. Make sure the connection cable does not get into the way.
5. Tighten the front holding screw to secure the front part to the mounting plate.

Connection base to terminal

- Max. Distance: 200 m (565 ft.)
- Twisted pair copper wires may be used for wiring in an EMC-safe environment. In an impaired EMC environment use only shielded cables. The operating voltage must comply with the requirements for safety extra-low voltage (SELV) as per EN 60730.
- 1 terminal may drive up to 8 base units. See wiring for parallel connections. Total wire distance should not exceed 200 m.
- Conductor resistance will influence external temperature reading. 450 Ω will result in an increase of 1 °C (2 °F). Compensate using UP-08 if external temperature is used to control unit.

Selection of actuators and sensors

Temperature sensors: Use only approved NTC sensors to achieve maximum accuracy. See ordering for details.

Binary auxiliary devices: E.g. fans and on/off valves. Do not directly connect devices that exceed maximum switching currents as detailed under technical specifications. Observe startup current of fans.

© Vector Controls LLC, USA
www.vectorcontrols.com

Display and operation

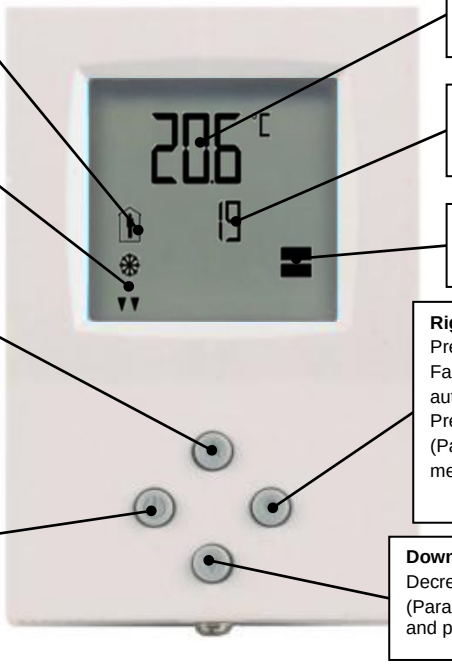

Mode
Display of operation mode

Indicators
according configuration:
Fan, stage 1, stage 2, reversing valve, reheat/frost
or
Fan, cool 1, cool 2, heat 1, heat 2

Up
Increase set point
(Parameter setting: Scroll menu options and parameters)

Left (POWER)
Press < 2 s: Toggle economy – comfort mode or switch from OFF to ON
Press > 2 s: Turn unit OFF. Text OFF displayed with current time (deluxe) temperature (standard)
(Parameter setting: Return to previous level. ESC)

Large digits
Display of input, set point or parameter value.

Small digits
Display of set point, clock or parameter number.

Vertical bar
Active stage

Right (OPTION); Fan
Press < 2 s: Change mode:
Fan only, heating only, cooling only, auto
Press > 2 s: clock and schedules.
(Parameter setting: ENTER to select menu option, accept parameter change)

Down
Decrease set point
(Parameter setting: scroll menu options and parameters)

Operation modes and symbols

	Comfort (occupied)	All control functions operating per set points.
	Economy (unoccupied):	Set points shifted according to *parameters FC04.* Economy mode and set point shift may be disabled with UP06
OFF	Energy hold off	Outputs are off, inputs monitored for alarm condition
	Heating	Output activates if temperature lower than set point
	Cooling	Output activates if temperature higher than set point
	Fan	Fan is running
	Manual	Fan only mode or override of time schedule
	Time schedule	A time schedule is active

Display of set point instead of current temperature

As standard the current temperature is shown in the large digits. Should only the set point be shown, select UP10 = 1. The current temperature will then not be visible anymore.

Power failure

All the parameters and set points are memorized and do not need to be reentered. Depending on **UP05** the unit will remain switched off, switch on automatically or return to the operation mode it was in before the power failure.
Deluxe version only: Timer operation and daytime setting will be retained for 24 h. The controller has to be connected to a power supply for at least 10 hours for the backup function to operate accordingly.

Frost protection

The controller will enter frost protection mode if the room temperature drops below 5 °C (41 °F). All heating outputs will be fully opened. Frost protection mode will be left once the temperature reaches 10 °C (50 °F). Frost protection display will remain until a button is pressed. Frost protection can be enabled/disabled using user parameter UP-09.

Error messages

Err1: Temperature sensor faulty. The temperature sensor is damaged.
Err2: External input for heat / cool auto change over missing or damaged.
FP: Steady: Frost protection is active.
Blinking: Frost protection activated in the past and is now inactive. Confirm with OPTION key.

Status LED

The status LED is located on the TLR-D5P base unit between the two low power terminal connector groups. The status LED may display the following feedback:
No light: No power or unit is damaged
Blink every 1 s: Error, terminal – base unit do not match or signal is not clear
Blink every 2 s: Normal communication, base unit detected
Blink every 5 s: Base unit operates normal, no terminal detected

© Vector Controls LLC, USA
www.vectorcontrols.com

Manual heat – cool change

To manually change heating or cooling mode press the OPTION key for more than 2 seconds. Access to manual heat – cool change may be disabled by parameters.

For standard models: Press OPTION > 2 sec. SEL and H-C is displayed. For deluxe models: Press OPTION > 2 sec. SEL and current time is displayed. Press UP key twice. SEL and H-C is displayed. Press OPTION again to toggle Heating, Cooling and Fan only modes.	SEL H-C

Clock operation

The deluxe model contains a quartz clock with battery back-up. Up to 4-time schedules with each 4 mode changes based on time and day of the week may be programmed. A blinking clock indicates that the time has not been set or if the unit was without power for longer than 48 hours. The time needs to be set to allow time schedules to operate.

Clock setup

Press OPTION > 2 s SEL and current time displayed Press OPTION < 2 s to change time, Minutes blink: UP/DOWN to change, OPTION to save, Hours blink: UP/DOWN to change, OPTION to save, Press OPTION to save time, DAY1 blinks: UP/DOWN to change, OPTION to save	SEL 00:00 DAY1 (Mon)

Creating time schedules

Step 1: Selection and enabling of time schedules

Press OPTION > 2 s SEL and current time displayed Press UP: SEL and PRO displayed, clock symbol blinks Press OPTION: PRO1 shows with 1 blinking. UP/DOWN select time schedule group Press OPTION OFF/ ON blinks, UP/DOWN to change, OPTION to save	SEL PRO	Pro1-Pro4 OFF/ON

Step 2: Select weekdays

This time schedule will be active during the selected weekdays Press UP/DOWN to step through available options: d1-7, d1-6, d1-5, d6-7, day1, day2, day3, day4, day5, day6, day7 Day 1 stands for Monday, day 2 for Tuesday and so forth Press OPTION to save day selection	Pro1 d1-7

Step 3: Selected action of first switching event

One bar on the right side indicates the first switching event Press UP/DOWN to select action for first switching event: No = switching event not active OFF = switches unit off, reset (UP17) active if switched to ON manually. Eco = sets operation mode to on and economy (not occupied), reset (UP17) active if set to comfort manually On = sets operation mode to on and comfort (occupied) Uni = University mode, reset (UP17) not active if manually activated Press OPTION to select switching time of first event	Pr01 no

Step 4: Selected time of first switching event

Press UP/DOWN to select switching time: Select switching time 00:00 to 23:45 in 15-minute steps Press OPTION to complete and select action of second switching event	Pr01 08:00

Step 5: Select actions and time of switching event 2 - 4

Repeat Step 3 and Step 4 for the remaining switching events. If a switching event is not needed, set it to "no" The bars on the right side indicate number of switching event After completing the 4th switching event, the process returns to the selection of the time schedule on step 1.	Pr01 08:00

➔ UNI: University mode: This switching mode is used for rooms such as lecture rooms and auditoriums that might be occupied during a certain time. During this time the reset is not active. The unit will not start itself when UNI mode is active. It still needs to be manually activated. This is to avoid unnecessary heating or cooling of such rooms while they are not occupied.

➔ A blinking clock indicates that the time needs to be set. Time programs will not operate if the time is not defined. See chapter operation, advanced settings for instructions on how to set the time.

➔ Access to time schedules may be disabled with UP-04.

© Vector Controls LLC, USA
www.vectorcontrols.com

Operation with OPR-1

The deluxe version may be alternatively operated with an infrared remote controller.

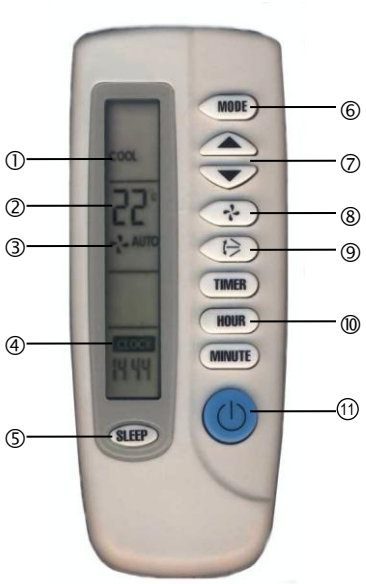

1. Mode indication, Auto, Dry, Cool, Fan, Heat
2. 2-digit display of set point
3. Fan indication
4. 4-digit display of current time or delayed switching time
5. Economy button: Toggles economy/comfort mode
6. Mode button, changes operation modes
7. UP/DOWN Button: Set point adjustment buttons
8. FAN Button: Changes fan speed, low – medium – high or auto
9. Boost button, activates full output for 5 minutes
10. Time related buttons: Timer, hour, minute
11. POWER button: Operation mode ON – OFF

Switching ON

The unit is switched on by pressing the POWER button. It will start up in comfort mode.

Changing between COMFORT and ECONOMY

Pressing the Economy button toggles between ECONOMY and COMFORT modes.

Switching OFF

Pressing the POWER while the unit is on, will switch the unit off. The current time will be displayed in the LCD of OPR-1.

Changing of set points

Only the set points for the temperature loop may be changed. Set point range is 15 to 30 °C.

Changing of fan speeds

Toggle between manual and automatic fan.

Boost

Pressing the boost button activates a 5-minute boost. The output will be fully opened for the period of 5 minutes independent of demand. This may be used to clear stale air during a meeting break or when entering the room.

Clock settings

The remote controller contains a daytime clock. In order to set the clock, press HOUR and MINUTE button together until the clock starts blinking. Then set the correct time with the HOUR and MINUTE buttons. Confirm by pressing the TIMER button. The clock of the OPR will set the clock of the controller.

Delayed switching

The unit may be delayed switched on or off using the timer button. Pressing the timer button once will display Timer ON if currently in OFF mode or TIMER OFF if currently in ON mode. Set the time when the unit is supposed to switch on or off using the HOUR and MINUTE buttons.

Mode changes

Repeatedly pressing the mode button may activate the following operation modes: HEAT, COOL and FAN ONLY. The mode change may be disabled using the UP parameters.
Note:
The remote controller is currently only available in °C mode.

© Vector Controls LLC, USA
www.vectorcontrols.com

Empty Page

© Vector Controls LLC, USA
www.vectorcontrols.com

Smart Sensors and Controls Made Easy!

Quality - Innovation – Partnership

Vector Controls LLC
USA

infous@vectorcontrols.com
www.vectorcontrols.com

© Vector Controls LLC, USA
www.vectorcontrols.com