TCI-W13-U, TCI-W23-U Series wall mounted universal controller



Features

- Universal PI and/or binary control for any analog input/output signal and range
- Multiple auxiliary functions: heat-cool auto changeover, automatic enable, set point compensation
- Differential, averaging, min and max functions
- Cascading of control loops (-W23 type)
- Alarm monitoring of low and high limits on all inputs
- Programmable reaction in case of alarm
- Feedback function for inputs and set points
- Functions for dehumidifying, set point shift, cascade control
- Password protected programmable user and control parameters

TCI-W23-U also includes

- Power cap protected real-time clock with 48 hr power backup
- 7-day programmable schedules, with options including change of set points and direct position of manual outputs
- Blue backlight

Applications

- Fan coil units
- Heat exchangers
- Zoning
- VAV
- Air handlers
- Fan, pump control
- Humidifiers
- Dehumidifiers
- Ventilation
- Radiant heating
- Radiant cooling
- Pressurization

General

- TCI-W13-U: 1 independent control loop, 1 internal temperature sensor, 1 universal input (analog/binary/temp), 1 binary output, 2 analog outputs
- TCI-W23-U: 2 independent control loops, 1 internal temperature sensor, 1 universal input, 1 passive input, 1 binary output, 2 analog outputs.
- Internal temperature sensor standard. Add replaceable humidity element as required or order -H version: AES3-HT-A2 (2%), AES3-HT-A3 (3%) or AES3-HT-A5 (5%)
- Flexible application configuration is made with a parameter-setting routine using the standard operation terminal

Name

T C I - W 2 3 - U

Housing	Blank = square housing
In/Outputs:	See table below
Control loops:	1 = 1 control loop, 2 = 2 control loops
Mounting:	W = Wall mounted
Series:	**TCI**

Ordering

Model	Stock code	Loop	Temperature input	Humidity input	UI	TI	Binary output	Analog output	Option
TCI-W13-U	40-10 0174	1		0	1	0	1	2	Standard
TCI-W13-U-H	40-10 0175			1					RH sensor 3% acc.
TCI-W23-U	40-10 0176	2		0		1			7-day programmable
TCI-W23-U-H	40-10 0177			1					RH sensor 3% acc.
AES3-HT-A2	40-50 0102			1					RH sensor 2% acc.
AES3-HT-A3	40-50 0103			1					RH sensor 3% acc.
AES3-HT-A5	40-50 0104			1					RH sensor 5% acc.

© Vector Controls GmbH, Switzerland

Technical specifications

Caution! This device is intended to be used for comfort applications. Where a device failure endangers human life and/or property, it is the responsibility of the owner, designer and installer to add additional safety devices to prevent or detect a system failure caused by such a device failure. Vector Controls or its affiliates cannot be held liable for any damage caused by such a failure. Failure to follow specifications and local regulations may endanger life, cause equipment damage and void warranty.

Power supply	Power requirements	24 VAC ±10%, 50/60 Hz, Class 2, 2.0 A, 48 VA max. 24 VDC ±10%
	Power consumption	max. 3 VA
	Electrical connection	Terminal connectors 0.34…2.5 mm² wire (AWG 22…13)
	Clock backup	min. 48 hours
Signal inputs	Universal input Input signal Resolution Impedance	Setting for voltage or current 0…10 V or 0…20 mA 9.76 mV or 0.019 mA (10 bit) Voltage: 98 kΩ Current: 240 Ω
	Universal input Range Accuracy	Input configured to remote temperature (RT) or digital input (DI) NTC (Sxx-Tn10 sensor): -40…140 °C (-40…284 °F) -40…0 °C (-40…32 °F): 0.5 K 0…50 °C (32…122 °F): 0.2 K 50…100 °C (122…212 °F): 0.5 K > 100 °C (> 212 °F): 1 K
	Humidity Sensor AES3-HT-Ax: Range Measuring Accuracy Hysteresis Repeatability Stability	Capacity sensor 0…100 % rH See Figure to the right ± 1% ± 0.1% < 0.5% / year
Signal outputs	Analog output Output signal Resolution Maximum load	 DC 0…10 V / 0…20 mA 9.76 mV / 0.019 mA Voltage: ⩾ 5 kΩ Current: ⩽ 250 Ω
	Relays outputs Type of disconnection AC voltage DC voltage	 Micro-interruption 0…48 VAC, 2(1.2) A max. (Observe local regulation) 0…30 VDC, 2 A max.
	Insulation strength between relays contacts and system electronics	 2000 VAC to EN 60730-1
Environment	Operation Climatic conditions Temperature Humidity	To IEC 721-3-3 class 3K5 0…50 °C (32…122 °F) < 95% RH non-condensing
	Transport & storage Climatic conditions Temperature Humidity Mechanical conditions	To IEC 721-3-2 and IEC 721-3-1 class 3K3 and class 1K3 -25…70 °C (-13…158 °F) < 95% RH non-condensing class 2M2
Standards	Degree of protection	IP30 to EN 60529
	Pollution class	II (EN 60730-1)
	Safety class	III (IEC60536)
	Overvoltage category	I (EN60730-1)
General	Material: Cover, back part Mounting plate	Fire proof ABS plastic (UL94 class V-0) Aluminum
	Dimensions (H x W x D)	Front part: 112 x 73 x 15 mm (4.4” x 2.9” x 0.6”) Power case: ø 58 x 32 mm (ø 2.3” x 1.3”)
	Weight (including package)	TCI-W13-U = 205g (7.2 oz.), TCI-W23-U = 220g (7.8 oz)

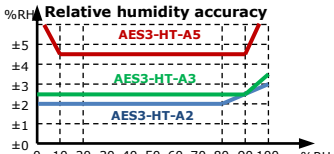

Figure 1: Max RH-tolerance at 25°C (77°F) per sensor type

Product testing and certification

CE Declaration of conformity

Information about the conformity of our products can be found on our website www.vectorcontrols.com on the corresponding product page under "Downloads"

© Vector Controls GmbH, Switzerland

Dimensions, mm (inch) and installation

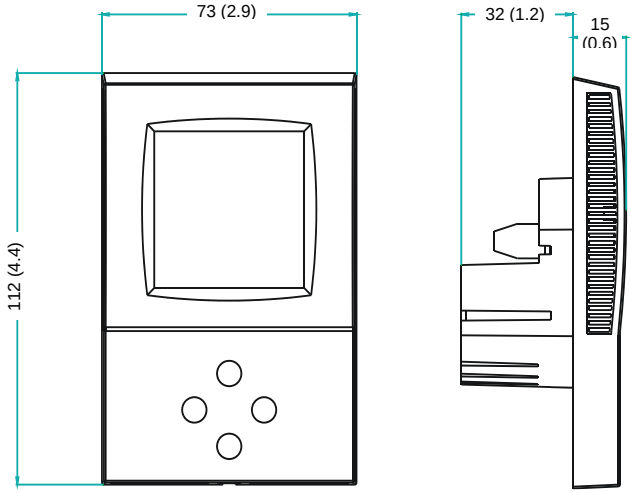

- Install the controller on an easy accessible interior wall, approx. 1.5 m above the floor in an area of average temperature.
- Avoid direct sunlight or other heat sources, e.g. the area above radiators and heat emitting equipment.
- Avoid locations behind doors, outside walls and below or above air discharge grills and diffusers.
- Location of mounting is less critical if external temperature sensors are used.
- Ensure adequate air circulation to dissipate heat generated during operation.
- Observe local regulations.

  Do not mount in a wet or condensation prone environments.

Connection

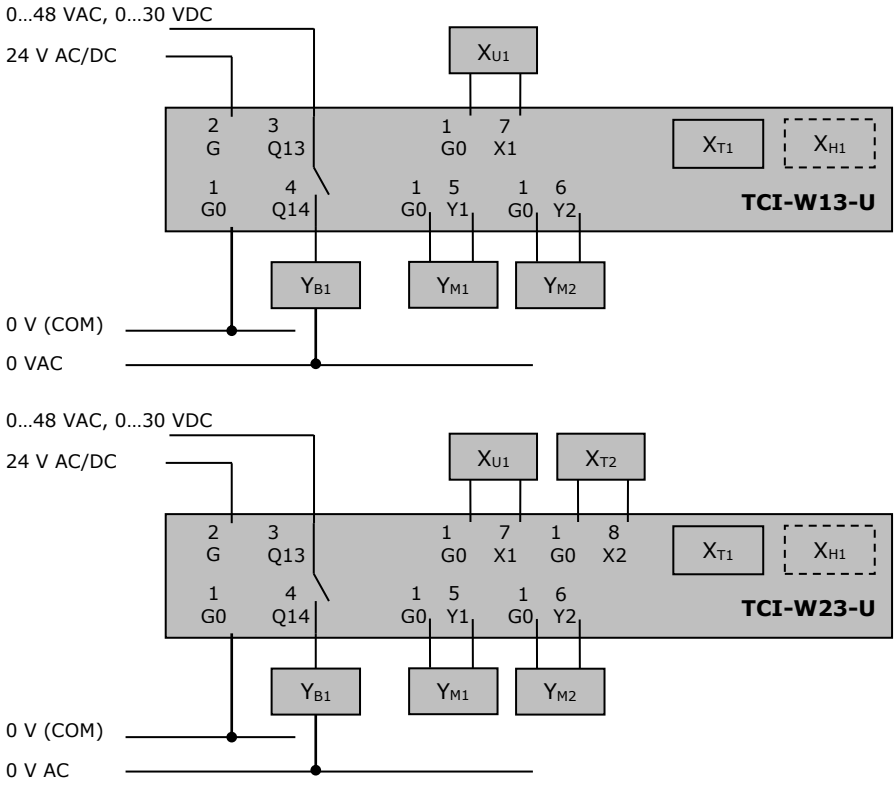

Warning:
Live electrical components!
During installation, testing, servicing and troubleshooting of Vector Controls products, it may be necessary to work with live electrical components. Have a qualified licensed electrician or other individual who has been properly trained in handling live electrical components perform these tasks. Failure to follow all electrical safety precautions when exposed to live electrical components could result in death or serious injury.

Terminal Description

G0	Power supply:	0 V, -24 VDC; common for power supply, analog in- and outputs
G	Power supply:	24 VAC, +24 VDC
X_{U1}	Universal input:	NTC 10 kΩ @ 25 °C (77 °F) or open contact, 0…10 VDC or 0…20 mA (selectable by jumper)
X_{T2}	Passive input:	NTC 10 kΩ @ 25 °C (77 °F) or open contact
Y_{B1}	Binary output:	Potential free relays contacts (see technical specification)
Y_{M1}, X_{M2}	Analog outputs:	0…10 V or 0…20 mA*
X_{T1}	Internal temperature input	
X_{H1}	Internal humidity input if AES3-HT is inserted	

Use copper, twisted pair, conductors only. The operating voltage must comply with the requirements for safety extra-low voltage (SELV) as per EN 60730. Use safety insulating transformers class II with double insulation as per EN 60742; they must be designed for 100% ON-time. When using several transformers in one system, the connection terminal 1 must be galvanic connected. TCI is designed for operation of 24 VAC safety extra-low voltage and is short-circuit-proof. Supplying voltages above 24 VAC to low voltage connections may damage the controller or other devices. Connection to voltages exceeding 42 V endangers personnel safety.

© Vector Controls GmbH, Switzerland

Selection of actuators and sensors

Temperature sensors: Use Vector Controls NTC sensors to achieve maximum accuracy: SDB-Tn10-20 (duct), SRA-Tn10 (room), SDB-Tn10-20 + AMI-S10 as immersion sensor.

Actuators: Choose modulating actuators with an input signal type of 0…10 V DC or 4…20 mA (Min. and max. signal limitations may be set with parameters. 3-pointactuators with constant running time are recommended).

Binary auxiliary devices (e.g. pumps, fans, on/off valves, humidifiers, etc.): Do not directly connect devices that exceed specified limits in technical specifications – observe startup current on inductive loads.

© Vector Controls GmbH, Switzerland