TLC3-FCR-T
Intelligent Fan Coil Controller

Features



- Temperature control for 2-pipe fan coil systems: heating, cooling or fan only
- Automatic or manual control of 3-speed fans
- On-off or PWM control for reduced room temperature fluctuations
- External input: remote NTC sensor, occupancy or key card contact, heat-cool changeover
- Economy mode and setpoint limits for energy saving
- Password-protected user and control parameters
- Low power consumption < 1 W, display in °C or °F
- Deluxe version: clock with time schedules, blue backlight, infrared remote control option

Applications

- Fan coil units in 2-pipe systems, radiators and chilled ceilings
- Constant air volume systems with 3-stage fans
- Individual room control in hotel rooms, meeting rooms and offices
- On-off or PWM control of 2 spring return valves, or on-off or floating control of one 3-point valve

General Description

The TLC3-FCR-T is a stand-alone electronic fan coil controller with one control loop, 1 internal NTC temperature sensor, 1 external NTC or contact input and 4 relay outputs. It is configured with the standard operation terminal; no special tools or software are required.

Ordering

Item Name	Item code	Variant	Power	Features
TLC3-FCR-T TLC3-FCR-T-W01	40-10 0129 40-10 0129-01	Standard Cooling only	24VAC/DC	Fan coil controller with: 1 TI int or ext 3 DO (Relay) Fan control 1 DO (Relay) Binary valve control
TLC3-FCR-T-230 TLC3-FCR-T-230-W01	40-10 0114 40-10 0114-01	Standard Cooling only	230VAC	
TLC3-FCR-T-D-24 TLC3-FCR-T-D-24-W01	40-10 0134 40-10 0134-01	Deluxe Cooling only	24VAC/DC	
TLC3-FCR-T-D-230 TLC3-FCR-T-D-230-W01	40-10 0115 40-10 0115-01	Deluxe Cooling only	230VAC	

Wiring Diagram

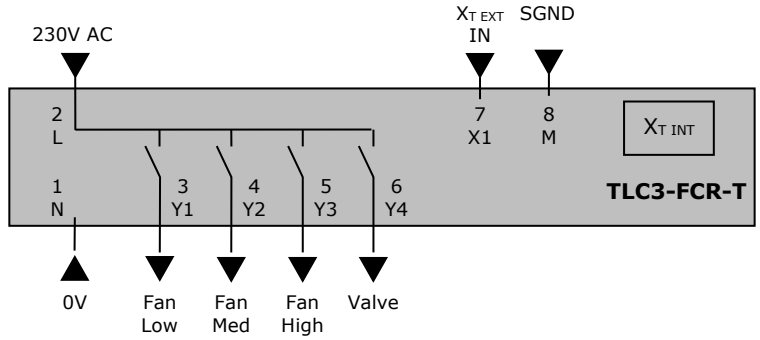

N	Power supply 0 V (neutral)	**Y1**	Relay output: fan speed low
L	Power supply 230 VAC	**Y2**	Relay output: fan speed medium
X1	Ext. input: NTC 10 kΩ or contact	**Y3**	Relay output: fan speed high
M	Signal common (SGND)	**Y4**	Relay output: valve

© Vector Controls GmbH, Switzerland

Technical Specification

Caution! This device is intended to be used for comfort applications. Where a device failure endangers human life and/or property, it is the responsibility of the owner, designer and installer to add additional safety devices to prevent or detect a system failure caused by such a device failure. Vector Controls or its affiliates cannot be held liable for any damage caused by such a failure. Failure to follow specifications and local regulations may endanger life, cause equipment damage and void warranty.

Power Supply	Operating Voltage		-24	-230
	AC voltage: 50/60Hz		22-26V AC/DC	210–250 VAC
	Power Consumption		Max 1W, 1.5 VA	
	Electrical Connection		Terminal Connectors	
	Deluxe type only: Power backup for real time clock		Min 48h if charged for 24h	
Signal Inputs	Temperature Inputs Range Accuracy		RT Internal, External (Sxx-Tn10 sensor) 0…50 °C (32…122 °F) 0.5°C (1°F)	
Signal Outputs	Digital Switching Outputs Switching Type Max. Switching power		DO1 to DO4 Relays 1385VA / 150W each output	
	Insulation strength between relays contacts and system electronics: between neighboring relays contacts		For -230 types only 4000V AC to EN 60 730-1 1000V AC to EN 60 730-1	
Environment	Operation Climatic Conditions Temperature Humidity		To IEC 721-3-3 class 3 K5 0°C …50°C (32°F…122°F) <95% R.H. non-condensing	
	Transport & Storage Climatic Conditions Temperature Humidity Mechanical Conditions		To IEC 721-3-2 and IEC 721-3-1 class 3 K3 and class 1 K3 -25°C…70°C (-13°F…158°F) <95% R.H. non-condensing class 2M2	
Standards	CE conformity EMC Directive Low Voltage Directive		 2004/108/EC 2006/95/EC	
	Product standards Automatic electrical controls for household and similar use Special requirement on temperature dependent controls		 EN 60 730 –1 EN 60 730 – 2 - 9	
	Electromagnetic compatibility for domestic sector		Emissions: EN 60 730-1 Immunity: EN 60 730-1	
	Degree of Protection		IP30 to EN 60 529	
	Pollution Class		II (EN 60 730-1)	
	Safety Class:	for -24 types for -120 and -230 types	III (IEC 60 536) II (IEC 60 536)	
	Overvoltage Category:	for -24 types for -120 and -230 types	I (EN 60 730-1) III (EN 60 730-1)	
General	Dimensions (H x W x D)	Front: Power case:	21 x 88 x 88mm (0.8 x 3.5 x 3.5 in.) 60 x 50 x 32mm (2.4 x 2.0 x 1.3 in)	
	Material:	Cover, back part Mounting Plate	ABS plastic (UL94 class V-0) Galvanized Steel	
	Weight (including package)	for -24 types for -120 and -230 types	standard: 265g (9.3oz), deluxe: 275g (9.7oz) standard: 295g (10.5oz), deluxe: 305g (10.8oz)	

© Vector Controls GmbH, Switzerland

Dimensions

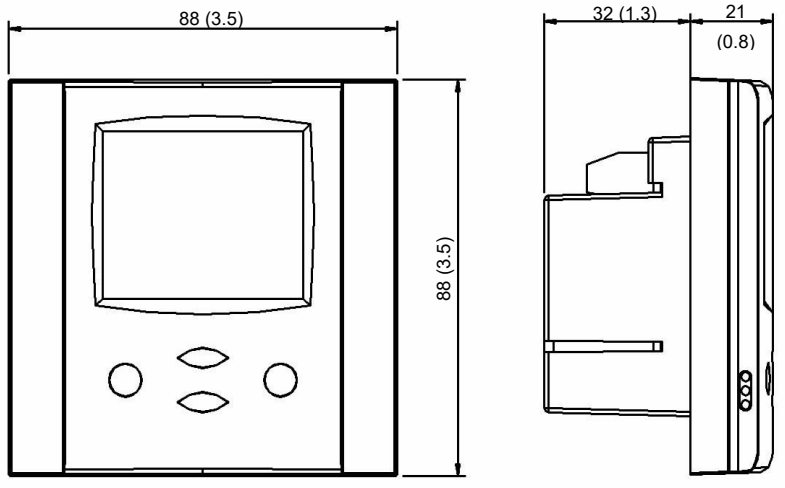

Space required in flush mounting box:
(H x W x D)
60 x 50 x 32mm (2.4 x 2.0 x 1.26 in.)

Distance for mounting screws:
Horizontal and vertical:
45 to 63mm (1.8 to 2.5 in.)

Selection of actuators, fans and sensors

Temperature Sensors: Use only our approved NTC sensors to achieve maximum accuracy. Recommended is SDB-Tn10-15 as Duct sensor, SRA-Tn10 as Room sensor and SDB-Tn10-15+AMI-10 as immersion sensor.

Binary auxiliary devices: E.g. fans, on/off valves, etc. Do not directly connect devices that exceed switching power. Observe startup current on inductive loads! Do not connect more than one fan coil unit to one controller.

Mounting and installation

Mount the controller on an interior wall, approx. 1.5 m above the floor, in a place with average room temperature. Avoid direct sunlight, heat sources, doors, outside walls and air outlets. The location is less critical if an external temperature sensor is used.

Mount and connect the controller as shown in the installation sheet supplied with the device, and wire it according to the wiring diagram on page 1.

© Vector Controls GmbH, Switzerland

Smart Sensors and Controls
Made Easy!

Quality - Innovation – Partnership

Vector Controls GmbH
Switzerland

info@vectorcontrols.com
www.vectorcontrols.com/

© Vector Controls GmbH, Switzerland