TCY-MT series PI-temperature controller

Features

- PI temperature control for HVAC systems
- Up to 2 modulating outputs 0–10 V DC with 10 mV resolution
- 1 internal temperature sensor and up to 2 external sensor inputs
- Remote control functions on the external input: heat/cool changeover, economy or off mode, external control sensor
- Password-protected user and control parameters
- Blue backlight



Applications

- Temperature control in heating, ventilation and air conditioning
- Stand-alone VAV control with pressure-independent actuators
- Water-only systems: radiators, floor heating or chilled ceilings
- Individual room control in offices, homes, hotel rooms and meeting rooms

General Description

The TCY-MT is a stand-alone electronic temperature controller with one control loop and up to 2 PI sequences. It has 1 internal NTC temperature sensor, up to 2 external sensor inputs and up to 2 analog outputs (0–10 V). The configuration is kept to a minimum for simple, off-the-shelf use; for more advanced functions and current inputs or outputs, the TCI range is recommended. It is configured with the standard operation terminal; no special tools or software are required.

Name

T C Y - M T 2 - (U)

Housing:	U = Vertical (2x4") housing, Standard is square housing
Function:	2 = 2 = 2-Pipe, 4 = 4-Pipe
Input:	T = Temperature, H = Humidity
Output:	M = Modulating, B = Binary
Series:	**TCY**

Ordering

Item Name	Item code	Control Type	Key-data
TCY-MT2-W01	40-10 0043-01	Cooling only	Compact PI controller with: 2 TI, 1 AO
TCY-MT2-W02	40-10 0043-02	Heating only	
TCY-MT2	40-10 0043	2-Pipe system	
TCY-MT4	40-10 0045	4-Pipe system	1 TI, 2 AO
Accessories			
S-Tn10-2	40-20 0001	Flying lead sensor with 2 m cable	
SD-Tn10-12-2	40-20 0002	Flying lead duct sensor 12cm immersion depth, 2m cable	
SD-Tn10-20-2	40-20 0003	Flying lead duct sensor 20cm immersion depth, 2m cable	
SDB-Tn10-12-1	40-20 0124	Duct sensor with housing, 12cm immersion depth	
SDB-Tn10-20-1	40-20 0133	Duct sensor with housing, 20cm immersion depth	
SOA-Tn10	40-20 0006	Outdoor sensor	

© Vector Controls GmbH, Switzerland
www.vectorcontrols.com

Technical specifications

Caution! This device is intended to be used for comfort applications. Where a device failure endangers human life and/or property, it is the responsibility of the owner, designer and installer to add additional safety devices to prevent or detect a system failure caused by such a device failure. Vector Controls or its affiliates cannot be held liable for any damage caused by such a failure. Failure to follow specifications and local regulations may endanger life, cause equipment damage and void warranty.

Power Supply	Operating Voltage	24 V AC/DC ± 10 %, 50/60 Hz, Class 2 48VA max
	Power Consumption	Max. 1.5 VA
	Electrical Connection	Terminal Connectors, wire 0.34-2.5 mm² (AWG 24…12)
Signal inputs	Temperature Input	
	Range	0-50 °C (32-122 °F)
	Accuracy	0.5 K
Signal outputs	Analog Outputs Output Signal Resolution Maximum Load	AO1, For TCY-MT4 AO2 DC 0-10 V 9.76 mV (10 bit) 10 mA
Environment	Operation Climatic Conditions Temperature Humidity	To IEC 721-3-3 class 3 K5 0-50 °C (32-122 °F) <95 % r.H. non-condensing
	Transport & Storage Climatic Conditions Temperature Humidity Mechanical Conditions	To IEC 721-3-2 and IEC 721-3-1 class 3 K3 and class 1 K3 -25-70 °C (-13-158 °F) <95 % r.H. non-condensing class 2MT2
Standards	CE conform according to EMC Standard 89/336/EEC EMEI Standard 73/23/EEC	EN 61 000-6-1/ EN 61 000-6-3
	Product standards Automatic electrical controls for household and similar use Special requirement on temperature dependent controls	 EN 60 730 –1 EN 60 730 – 2 – 9
	Degree of Protection	IP30 to EN 60529
	Safety Class	III (IEC 60536)
General	Cover, back part Mounting Plate	Fire proof ABS plastic (UL94 class V-0) Galvanized Steel
	Dimensions (H x W x D)	Front part: 88 x 88 x 21 mm (3.5” x 3.5” x 0.8”) Power case: ø 58 x 32 mm (ø 2.3” x 1.3”)
	Weight (including package)	252 g (8.9 oz)

Dimensions [mm] (inch)

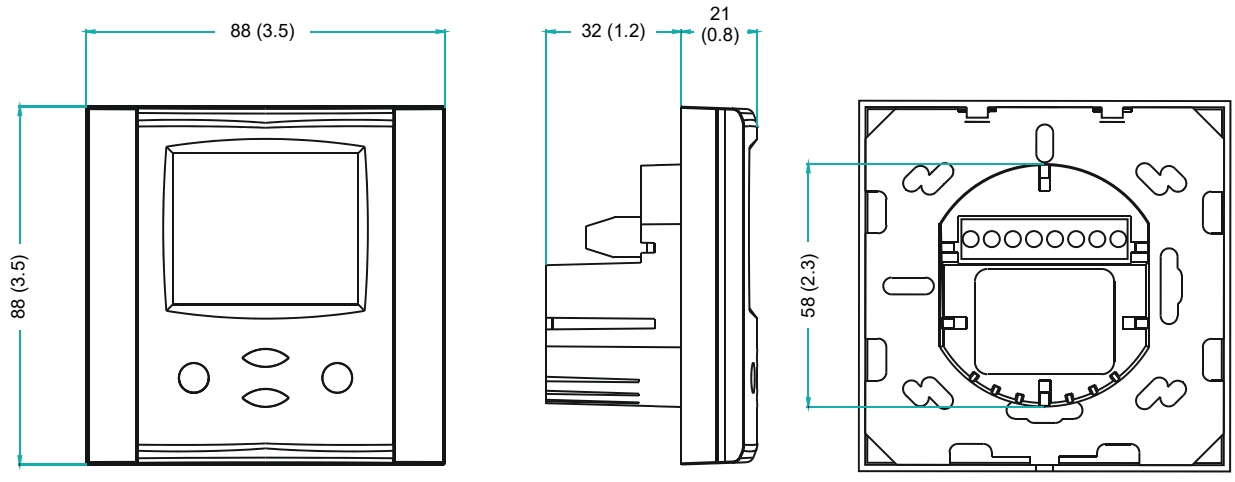

© Vector Controls GmbH, Switzerland
www.vectorcontrols.com

Connection diagram

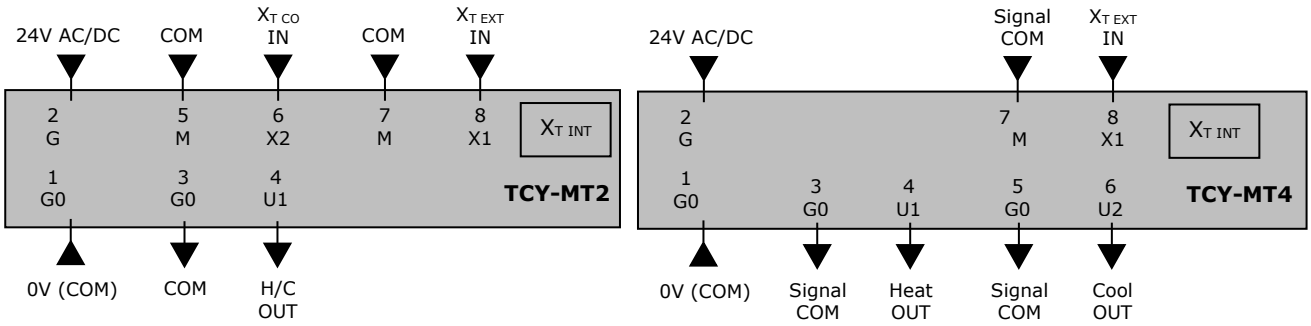

Description:

G0	Power supply:	0V, -24VDC, internally connected to signal common
G	Power supply:	24VAC, +24VDC
M	Signal common:	Common 0 potential for analog inputs and analog outputs.
X1	External temperature input:	NTC 10kΩ @ 25°C (77°F)

TCY-MT2:

X2	Changeover input:	NTC 10kΩ @ 25°C (77°F)
U1	Analog output:	0…10 V DC

TCY-MT4:

U1	Analog heating output:	0…10 V DC
U2	Analog cooling output:	0…10 V DC

Selection of actuators and sensors

Temperature Sensors:

Use only our approved NTC sensors to achieve maximum accuracy. Recommended is SDB-Tn10-20 as Duct sensor, SRA-Tn10 as Room sensor and SDB-Tn10-20 with AMI-S10 as immersion sensor.

Modulating Actuators:

Choose actuators with an input signal type of 0–10V DC or 2–10V DC.

Mounting and installation

Mount the controller on an interior wall, approx. 1.5 m above the floor, in a place with average room temperature. Avoid direct sunlight, heat sources, doors, outside walls and air outlets. The location is less critical if an external temperature sensor is used.
Mount and connect the controller as shown in the installation sheet supplied with the device, and wire it according to the connection diagram above.

© Vector Controls GmbH, Switzerland
www.vectorcontrols.com

Display and Operation

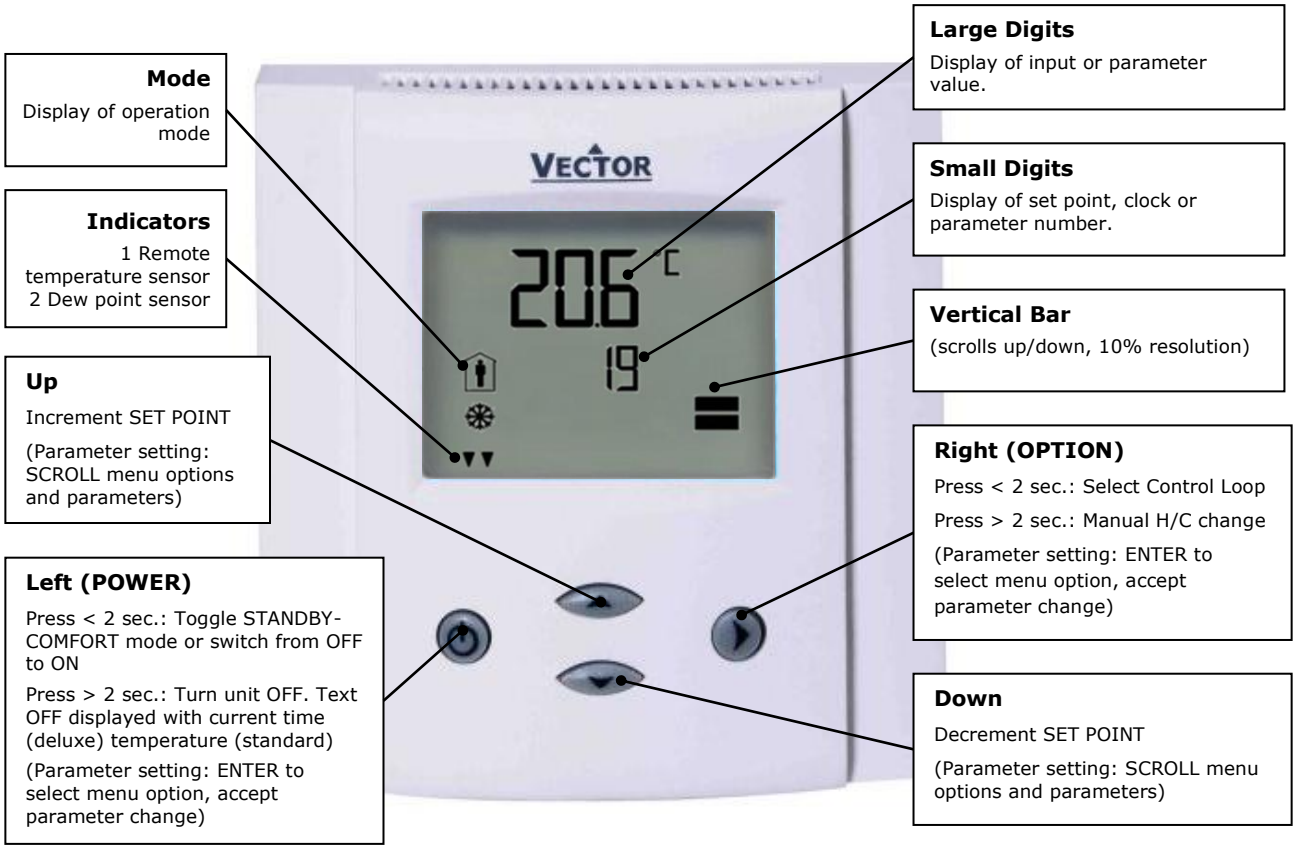

Operation mode		
	Comfort (occupied)	All control functions operating per set points.
	Economy (unoccupied):	Set points shifted according to *Parameters CP04.* Economy mode and set point shift may be disabled with UP07
OFF	Energy Hold Off	Outputs are off, inputs monitored for alarm condition
	Heating	Output activates if temperature lower than set point
	Cooling	Output activates if temperature higher than set point

Power Failure

All the parameters and set points are memorized and do not need to be reentered. Depending on **UP05** the unit will remain switched off, switch on automatically or return to the operation mode it was in before the power failure.
Deluxe version only: Timer operation and daytime setting will be retained for 24h. The controller has to be connected to a power supply for at least 10 hours for the backup function to operate accordingly.

Error messages

The TCY-MT may display the following error condition:
Err1: The connection to the temperature sensor may be interrupted or the temperature sensor is damaged. The output is switched off. Verify parameter settings and wiring.

© Vector Controls GmbH, Switzerland
www.vectorcontrols.com

Empty Page

© Vector Controls GmbH, Switzerland
www.vectorcontrols.com

Smart Sensors and Controls
Made Easy!

Quality - Innovation – Partnership

Vector Controls GmbH
Switzerland

info@vectorcontrols.com
www.vectorcontrols.com/

© Vector Controls GmbH, Switzerland
www.vectorcontrols.com